Focus Microwaves Inc.
970 Montee-de-Liesse, Suite 308
Ville St-Laurent, Quebec
Canada H4T 1W7
Tel: (514) 335-6227 Fax: (514) 335-6287
Email: focusmw@compuserve.com
Web site: http://www.focus-microwaves.com

Application Note No 24-A

Concept for Load Pull Measurements with Harmonic Impedance Control

Multi Harmonic load pull improves the Power Efficiency of Transistor (Bipolar and FET) power amplifiers.
This note describes a technique that uses a test fixture designed to determine and use optimum harmonic load impedances to the DUT during load pull at the fundamental frequency. Load pull impedances of far less than 1Ω are possible by simultaneous use of λ /4 transformers.

Introduction

It has been reported that optimum harmonic loading of power transistors significantly increases efficiency depending on frequency and transistor type [1]. The phase of the reflection factor at the harmonic frequencies is important and may improve or deteriorate the power efficiency of the transistors by more than ±10 percentage points. In general power efficiency can be improved by placing a **high reflection factor** with **appropriate phase** at the second and third harmonic frequency at the output of the transistor, in order to reflect and recover the associated RF power back into the device. An efficiency improvement of 15% between a harmonic load $Z(2f_0)=50\Omega$ and an optimum load $Z(2f_0)$ has been reported at 1.8 GHz [4].

At this point of time the only practical way to vary and optimize the harmonic loads of a transistor is to use one of the experimental harmonic load pull systems, available at different research laboratories and universities [1,2,3,4]. These harmonic load pull systems are all "active", ie. they use the DUT's output signal returned amplified back to the DUT in order to "emulate" a variable load. By injecting the harmonic signals the systems can also vary the harmonic impedances, independently on the fundamental load.
Disadvantages of this method, except of prohibitive cost, is that it is not commercially available and requires a lot of experience to operate, in addition to the complex auxiliary instrumentation involved.

This note describes a simple method for full scale load pull at the fundamental frequency with the load at the harmonic frequencies $2f_0$ and $3f_0$ fixed at predefined values. The method uses a specially designed test fixture based on Focus' PTJ-0 [5]. This Note 24-A describes the concept for these measurements while note 24-B presents actual measured data.

Load Pull with Harmonic Impedance Control

In normal load pull using automated mechanical or electronic tuners the load impedances at harmonic frequencies vary in a non-controllable manner when we tune the fundamental impedance (figure 1). The harmonic impedances shown in figure 1 can be calculated by CCMT software after each manual or mouse tuning step by using the key combination "Alt-H" ("H" for Harmonics).

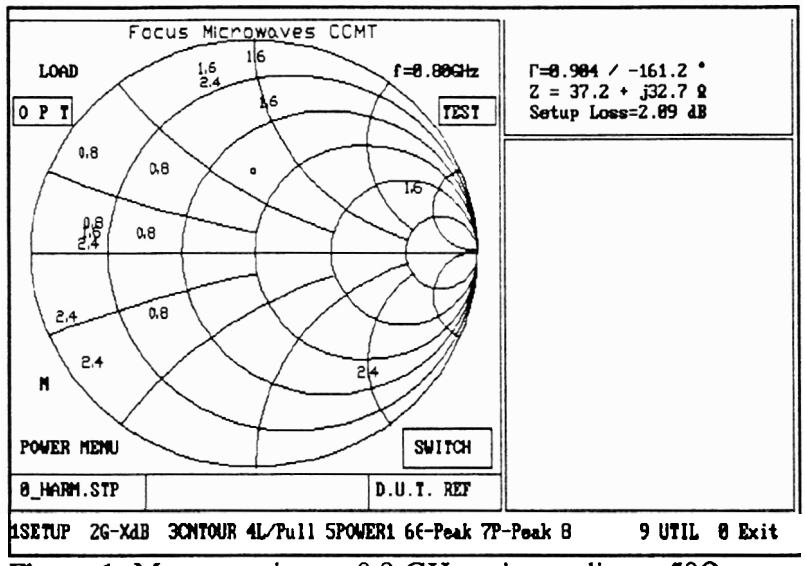

Figure 1: Mouse tuning at 0.8 GHz using ordinary 50Ω setup. Impedances at 1.6 and 2.4 GHz move uncontrollably.

In order to be able to control the load impedances at the harmonic frequencies we have to design the output microstrip section of the test fixture such as to include two parallel open stubs which will present a short circuit at the harmonic frequencies $2f_0$ and $3f_0$ and place them at the right distance of the DUT output port to obtain the appropriate required phase for each of those impedances. By doing this we conserve full tunability at the fundamental frequency, since the two parallel stubs do not add any real part to the circuit at the fundamental frequency.

The general form of the harmonic control test fixture is shown in figure 2:

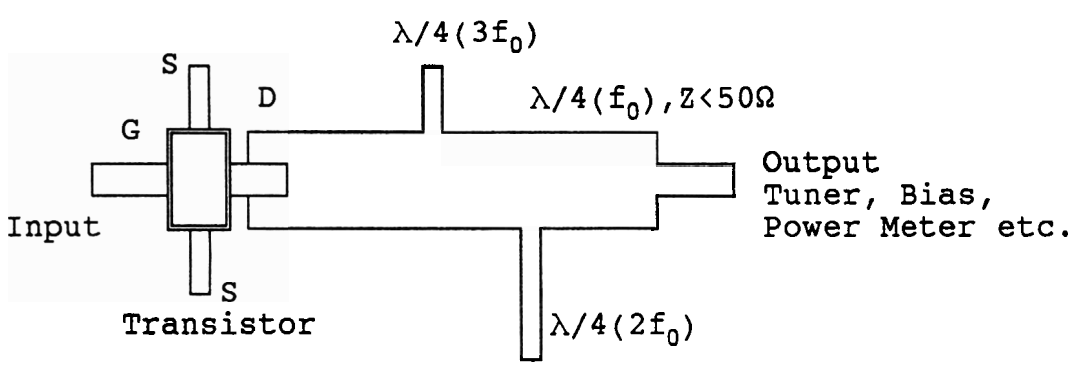

Figure 2: Layout of test fixture for harmonic control (PTJ-HCTR)

The design of this test fixture is made for maximum $\Gamma(f_0)$ at DUT reference plane and the distances of both $\lambda/4$ stubs such as the phases of $\Gamma(2f_0)$ and $\Gamma(3f_0)$ to correspond to the

required values.
If such a test fixture is used, tuning at the different harmonics becomes practically independent on the fundamental frequency tuning (figure 3). The s-parameter of the test fixture are included it in the CCMT setup software and the impedances are automatically de-embedded to the DUT reference plane. The test fixture can be designed such as to place $\Gamma(2f_0)$ and $\Gamma(3f_0)$ at required places on the Smith Chart and load pull at the fundamental frequency (f_0) without modifying $Z(2f_0)$ and $Z(3f_0)$ (figure 2). Effective bandwidth is about 100 MHz. If more than one set of frequencies needs to be used Focus can supply different sets of substrates for the test fixture.
Figure 3 shows the effect of the special test fixture on the harmonic impedances when tuning at the fundamental frequency using a 0.8 to 18 GHz tuner (model 1808-CCMT) and the mouse. The CCMT load pull software permits to display Harmonic impedances at DUT reference plane automatically displayed using the macro key combination "Alt-H". The test fixture employed in order to generate the impedances shown in figure 2 is based on 50Ω microstrip throughline and two open stubs with 100Ω characteristic impedance.

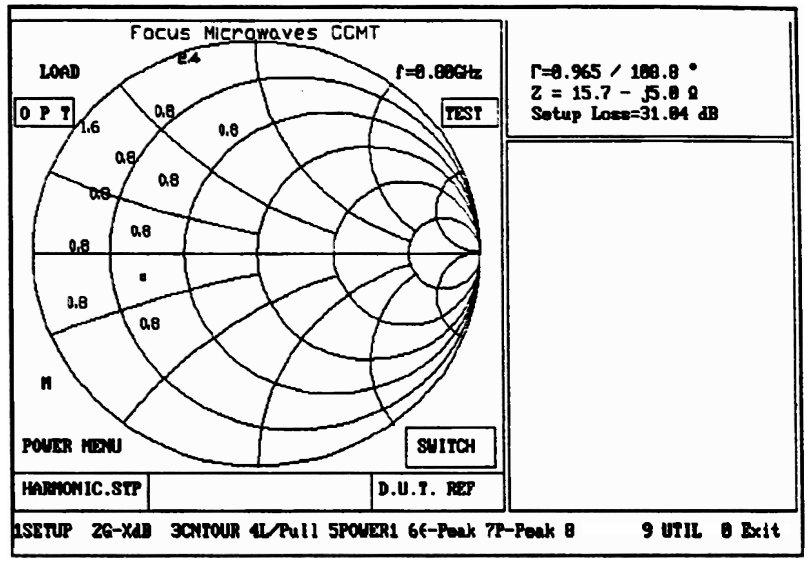

Figure 3: Mouse Tuning at 0.8GHz using harmonic control fixture. Impedances at 1.6 and 2.4 GHz are not affected by fundamental tuning.

The harmonic impedance control method described in this note also permits to use λ /4 transforming test fixture sections in order to be able to tune to very low impedances at DUT reference plane [6]. This allows to tune to load impedances of less than 1Ω (figure 4).

However if the tuner calibration impedances are distributed as shown in figure 4 the tuning resolution in the area of interest (around 1 to 3Ω) is not high

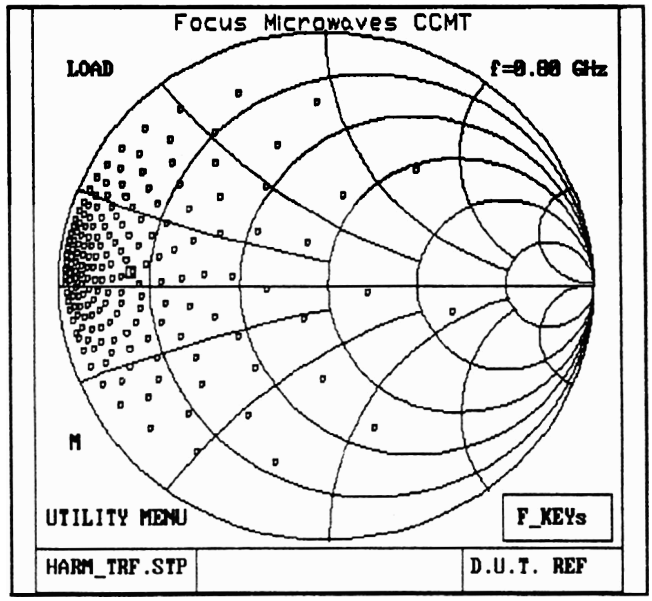

Figure 4: Load pull tuning capability using transforming test fixture.

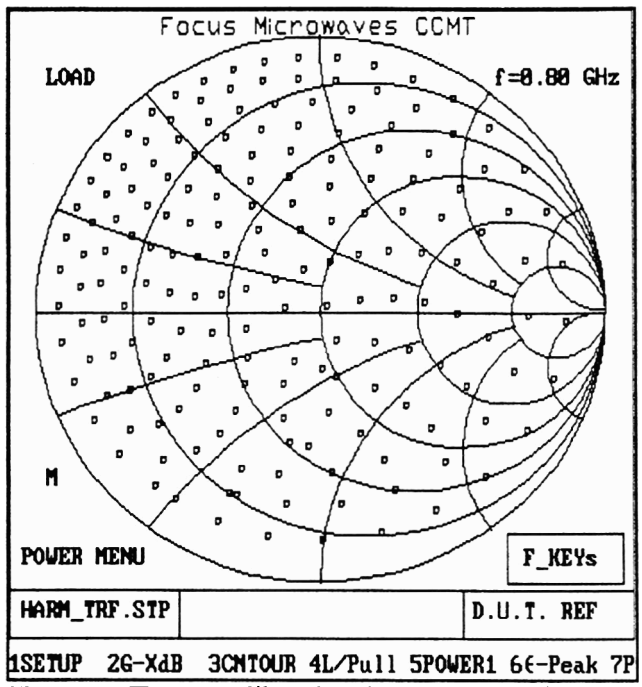

Figure 5: Tuner calibration impedances after cascading to the transforming test fixture and normalizing to Z_0=11.2Ω

In this new tuning environment the impedances at the fundamental frequency (0.8GHz) look similar to those in figure 3, but their real part Re(Z) is much lower (<1Ω) since the center of the Smith Chart is at 11.2Ω instead of 50Ω. The impedances at the harmonic frequencies are shifted as well and correspond to lower Re(Z) values than before. Again we can tune using the mouse to any point at 0.8 GHz (values shown in figure 6 have Re(Z)<1Ω), whereas the impedances at 1.6 GHz and 2.4 GHz do not change.

The s-parameter of the optimized test fixture designed for very low impedace tuning at the fundamental frequency and fixed 2f and 3f impedances for simultaneous harmonic impedance control are shown in table 1:

enough for fine tuning. For this reason the CCMT load pull software offers the option of "characteristic impedance normalization". In this case all tuner calibration points and associated interpolation calculations are made using a new characteristic impedance, which permits better coverage of the Smith Chart and associated tuning resolution. The CCMT load pull software has the capability of automatically computing new system characteristic impedances different than 50Ω to ensure an adequate coverage of the Smith Chart. For this purpose the CCMT software re-normalizes all tuner calibration points at DUT reference plane. Figure 5 shows how the calibration points of figure 4 are now distributed on the Smith Chart. In this case (figure 5) the new characteristic impedance of 11.2Ω is used instead of 50Ω (figure 4).

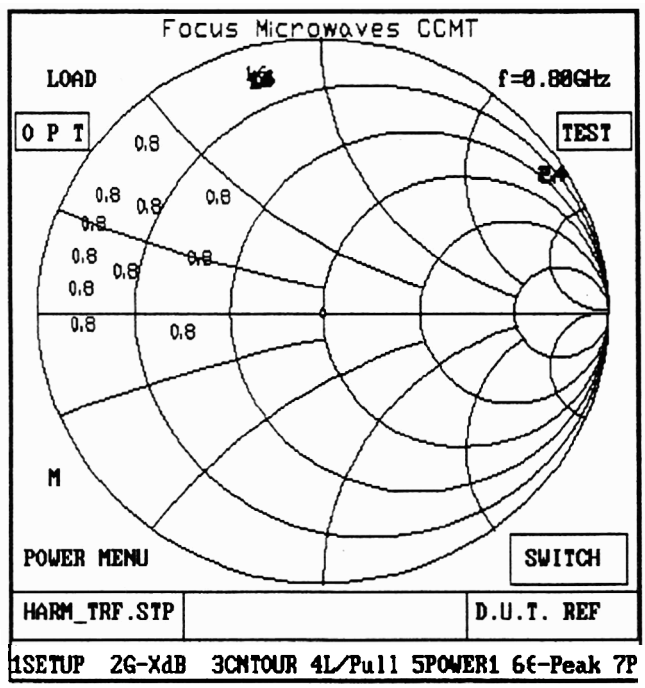

Figure 6: Tuning at fundamental frequency (0.8GHz) using a transforming fixture does not affect the impedances at the harmonic frequencies (1.6 and 2.4GHz)

! Harmonic Control and Transforming Test Fixture PTJ-HCTR
!==========
! CIRCUIT: TEST

! FREQ	--- S11 ---		--- S21 ---		--- S12 ---		--- S22 ---	
!	MAG	ANG	MAG	ANG	MAG	ANG	MAG	ANG
0.800	0.7403	175.991	0.66954	-95.9148	0.66954	-95.9148	0.73956	172.120
0.900	0.7099	167.770	0.70107	-105.278	0.70107	-105.278	0.70844	161.808
1.000	0.6456	158.764	0.75931	-116.458	0.75931	-116.458	0.64253	148.813
1.100	0.5207	149.197	0.84667	-131.195	0.84667	-131.195	0.51369	129.763
1.200	0.2978	148.304	0.94145	-152.415	0.94145	-152.415	0.27631	90.7773
1.300	0.2888	-145.248	0.93188	177.425	0.93188	177.425	0.26155	-50.1127
1.400	0.6783	-151.337	0.68850	143.916	0.68850	143.916	0.67349	-108.982
1.500	0.8998	-174.922	0.34372	117.592	0.34372	117.592	0.90424	-141.996
1.600	0.9558	160.724	0.03615	176.450	0.03615	176.450	0.96842	-166.807
1.700	0.8454	128.363	0.40537	-129.162	0.40537	-129.162	0.87339	168.348
1.800	0.3658	65.1136	0.84566	-171.020	0.84566	-171.020	0.44216	148.910
1.900	0.3864	-111.757	0.87200	144.386	0.87200	144.386	0.42044	-150.687
2.000	0.6911	-153.202	0.68830	117.474	0.68830	117.474	0.69653	-157.184
2.100	0.8203	-175.303	0.53760	100.561	0.53760	100.561	0.82252	-168.268
2.200	0.8853	166.239	0.41440	87.2063	0.41440	87.2063	0.88997	-178.023
2.300	0.9223	144.397	0.27434	74.8440	0.27434	74.8440	0.93646	172.097
2.400	0.9068	106.127	0.06333	129.074	0.06333	129.074	0.95615	158.819

Table 1: S-parameter of optimized output section of the test fixture for harmonic impedance control and low impedance (high VSWR) tuning.

The s-parameter of the test fixture in table 1 show that the DUT will see a high reflection factor of 0.96 and 0.91 at 1.6 and 2.4 GHz. This high reflection cannot be offset by the output tuner cascaded between test fixture and load. This is shown clearly in the tuning patterns of figures 3 and 6.

Load Pull Setup for Harmonic Impedance Control

The measurement setup used for this application is shown in figure 7.
It utilizes a synthesized signal source (S1), an input coupler (C1), two programmable pre-calibrated tuners (T1 and T2), a microstrip test fixture (in our case the Focus Microwaves power transistor fixture, model PTJ-0 (figure 8) to be extended by option -HCTR, and a dual channel power meter, together with bias tees, isolators and attenuators.
The complete setup is controlled by an IBM®-PC compatible computer with GPIB and tuner control interface, as supplied by Focus Microwaves.
For Intermod measurements a second source has to be added at the input, and the output has to be connected to a spectrum analyzer.

In normal operation this setup can measure and optimize Output Power, Gain and Efficiency of any device mounted in the test fixture as a function of source and load impedance. Source/Load Impedance values of a few Ohms (in 50Ω system) or a few tenths of 1Ω (in a transforming test fixture) can typically be synthesized by the tuners [6], all at the fundamental frequency of operation [7].

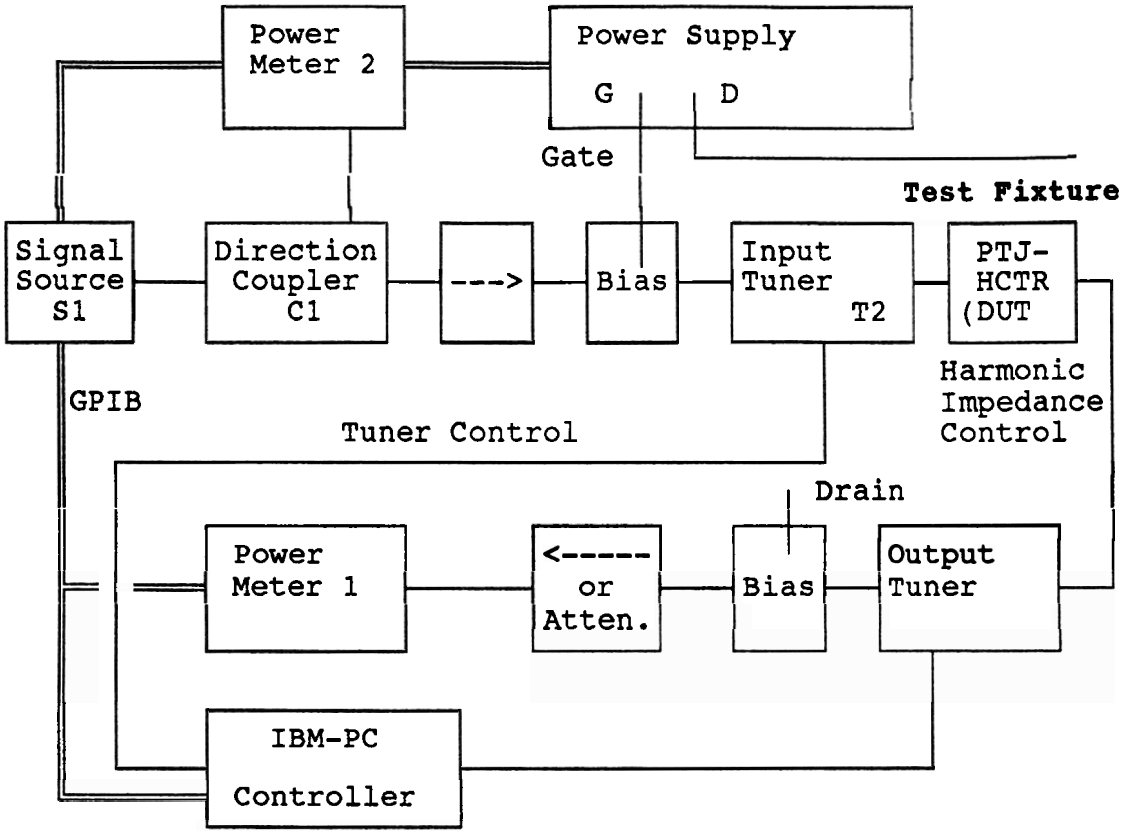

Figure 7: Load Pull Setup for Power, Gain, Efficiency with Harmonic Impedance Control

The particularity of this setup consists in the specific layout of the output microstrip network of the test fixture (figure 2). The test fixture itself is a modified version of the power transistor test fixture PTJ-0 (figure 8). This network includes a number of open stubs that can be connected to the main line at specific offset phases, as shown in figure 2.

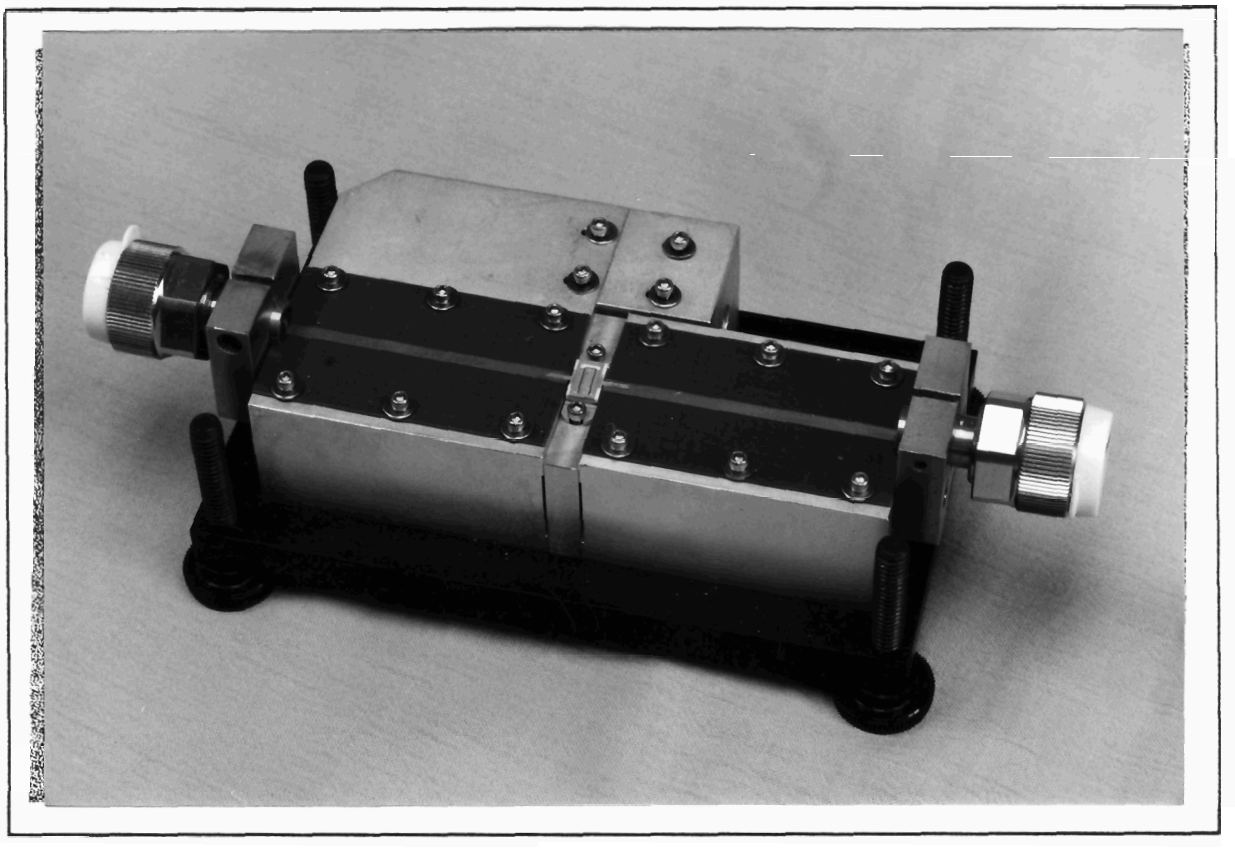

Figure 8: The Power Transistor Test Fixture, model PTJ-0 with GPC-7 mm connectors

Determination of Optimum Phase of Γ_{Load} for Harmonic Control

In order to determine the optimum phase of the highly reflective load circuit to be connected at the output of the transistor at the 2nd and 3rd harmonic the following measurements need to be made:

1- Search, using the fundamental load tuner the optimum load for maximum Power Efficiency.

2- Add to the transmission line of the test fixture (before the tuner) an **offset phase network** (figure 9). This is a set of four 90° offset shorts (λ /4 open microstrip lines at the harmonic frequency $2f_0$).

Connecting one by one the open stubs to the main microstrip line we measure the power efficiency with all other parameters of the setup fixed. The curve Eff(ϕ_{Load}) normally has sinusoidal behaviour and will pass through a maximum. By interpolating between the four measured points we can identify the optimum phase. We can use the same concept for the four open stubs at the opposite side of the main microstrip line which are λ /4 at $3f_0$ and placed at 90° intervals also at $3f_0$. At the end of this procedure we will have a fairly accurate information about the optimumphase of the harmonic load impedances of the transistor.
The optimum phase will not necessarily correspond to one of the selected phases, but the shape of the response always permits to determine the exact phase by interpolation (figure 10).

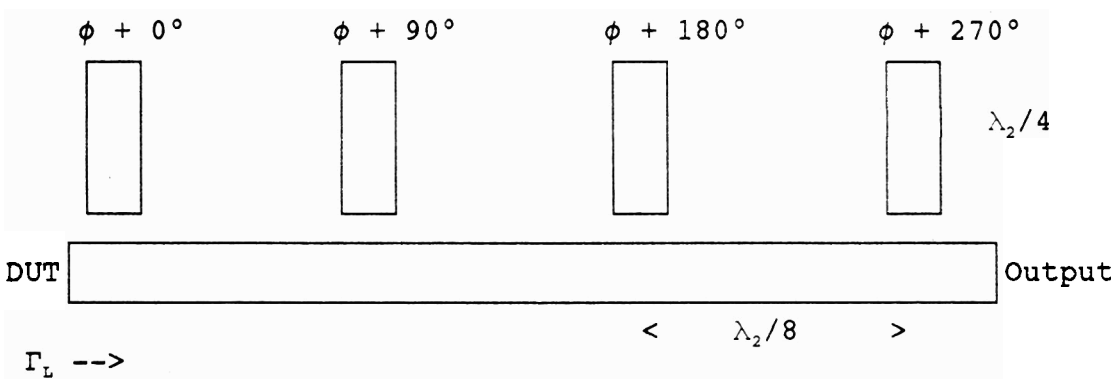

λ_1 = Wave length at the fundamental frequency
λ_2 = Wave length at the second harmonic frequency = $\lambda_1/2$
$\lambda_3 = \lambda_1/3$

Figure 9: Harmonic Impedance Control Network, to be placed at the output side on the test fixture. For $3f_0$ we have to symmetrically double the layout of the pattern below the 50Ω microstrip line. λ_2 is to be replaced by λ_3.

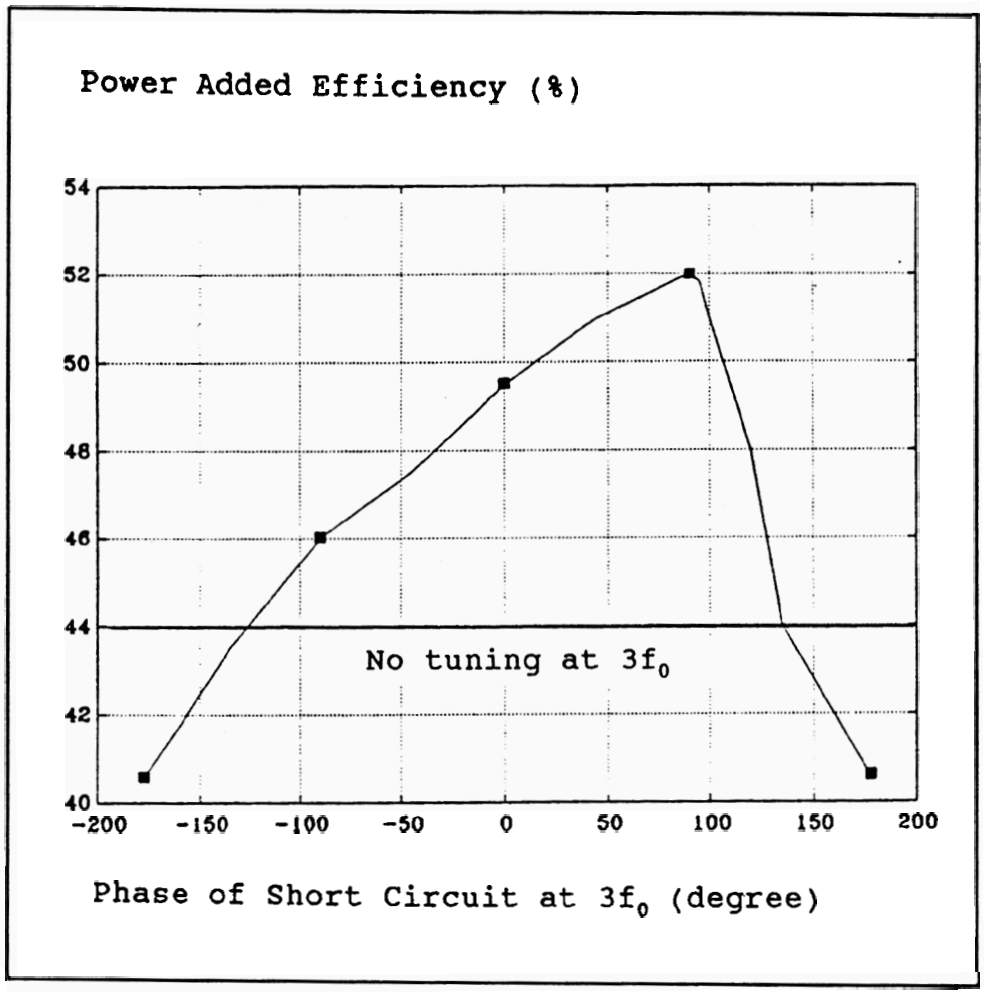

Figure 10: Dependence of Efficiency on Phase of Harmonic Load

Conclusion

Full Harmonic Load Pull Setups [1-4] can provide useful information about the nonlinear behaviour of transistors, but for the design of high efficiency power amplifiers this kind of setup requires too must time, money, a lot of specific instruments and people, to be cost effective.

The uncomplicated technique described in this application note uses a simple microstrip circuit as part of the test fixture output network combined with the hardware and software components of a pre-calibrated 'of the shelf' load pull tuner system and permits the determination of the 2nd and 3rd harmonic loads for optimum power efficiency of FET and bipolar transistor amplifiers. In combination with transforming networks this test fixture allow simultaneous load pull at very low load impedances (<1Ω).

References

[1] Ghannouchi et al. "A Multi Harmonic loading method for large-signal microwave and millimetre-wave transistor characterization", IEEE Transactions on microwave theory and techniques, Vol.39 (1991) No. 6, p. 986-992.

[2] B.Hughes, A.Ferrero, A.Cognata, "Accurate on-wafer Power and Harmonic Measurements of mm-wave Amplifiers and Devices", Proceedings MTT-S 1992, p. 1019ff.

[3] A.Ferrero, F.Sanpietro, U.Pisani, C.Beccari, "Novel hardware and software solutions for a complete linear and nonlinear microwave device characterization", IEEE-transactions on Instrumentation and Measurements, vol 43, number 2, April 1994, p. 299-305.

[4] F.Blache, JM.Nebus, Ph.Bouysse, JP.Villotte, "A novel computerized multiharmonic active load pull system...", Proceedings of MTT-S, 1995, p. 1037ff.

[5] "Test Fixture for Medium and High Power RF Transistors", Product Note 7, Focus Microwaves, January 1994.

[6] "Load Pull Measurements on Very Low Impedance Transistors", Application Note 6, November 1993, Focus Microwaves.

[7] "Setup Configurations for Very Low Impedance Tuning", Product Note 24, Focus Microwaves, January 1995.