FOCUS MICROWAVES GROUP

Load Pull Characterization

White Paper #64

Dr. Christos Tsironis

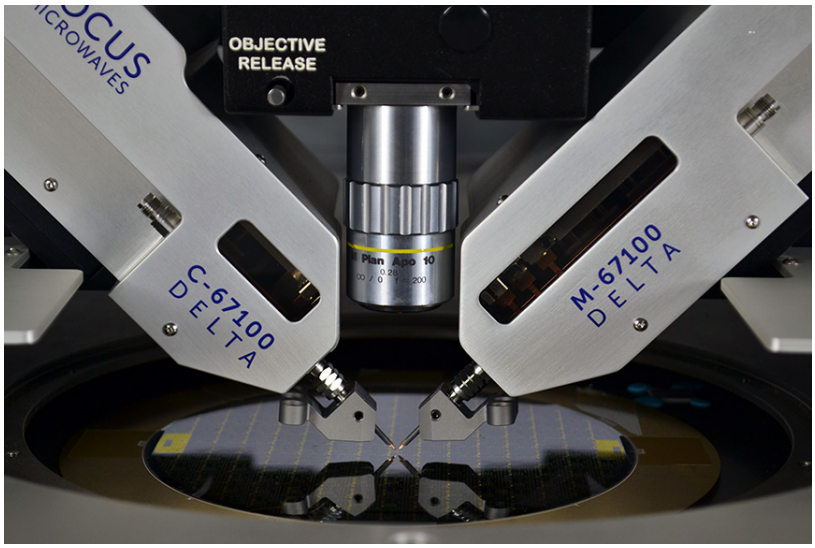

This document is an easy-to-read summary of our experience with load pull measurement techniques.

Introduction

As an introductory remark I would like to emphasize that this note is not the result of extensive study of existing literature and neither has it the ambition of a complete coverage of all historical and theoretical facts. It rather represents mine and my colleague's experience and is the result of years in the laboratory trying to develop products that will help engineers and scientists understanding and improving their products. Our research and findings over the years has been, and is, applied and directly oriented towards final products and practical solutions.

Acknowledgement

I have contributed to the work presented here, but not alone. Over a period of 30 years Engineers, Scientists and Technicians have carried the burden of trying and improving many of the ideas. They are summarily recognized and appreciated; in particular, Dominique Dubouil (ex. Focus), Bryan Hosein (Focus), Roman Meierer (ex. Focus), Baoli Tian (Focus), Raymond Jallad (Focus), Neven Misljenovic (ex. Focus), Randeep Saini (ex. Mesuro), Tudor Williams (ex. Mesuro), Simon Woodington (Mesuro), Paul Tasker (Univ. of Cardiff), and several others.

Table of Contents

Definition of Load Pull

Modern active devices in RF/microwave power amplifiers can deliver high output-power levels, at times over broad frequency ranges. But this requires establishing optimum source and load conditions for those active devices at as many operating frequencies as possible. Finding those optimum load conditions is possible by characterizing a device under test (DUT) while changing the impedance presented to the load at different frequencies while measuring to find the maximum output power at each frequency.

This can be done using Load Pull "LP" (or Source Pull, "SP"); this is a test method whereby a potentially non-linear microwave device (typically a two-port, especially a microwave power transistor) is presented with varying loads while its RF and DC behavior is measured and registered. As in all experiment and measurement, only one external parameter (stimulus) is allowed to change, for being able to extract useful information. All other externally imposed parameters are test conditions and must remain controlled and constant.

In the case of load pull the changing parameter (stimulus) is the load (or source) impedance. At this point the first hurdle appears, since, in nonlinear devices, the input signals are usually deformed, creating undesired harmonic components. This means that, when the load impedance is defined at one harmonic frequency, the impedances at the other harmonic frequencies shall be dealt with as additional external measurement conditions and must remain fixed. Thus, we are already speaking of "harmonic load pull, HLP", i.e. of a test method, whereby as the load impedance at one harmonic frequency is changing, all other externally defined conditions, environmental, RF and DC and all impedances at all other harmonic frequencies remain constant. This can only be done using harmonic tuners or harmonic tuning.

The result of load/source pull tests are plots, wherein the measured quantity is mapped over the impedance, best represented on a Smith Chart. The measured quantity can be anything, not only output power (Pout) or gain (G). It can be DC current (Id), Power added or Collector Efficiency (PAE), Intermod (IMD), Adjacent Channel Ratio (ACPR), Error Vector Magnitude (EVM) or else, or a combination of those. When the device is driven in small signal "linear mode" (class A) the gain or power isometric contours are gain circles around the optimum impedance (the conjugate internal impedance of the device), which can be calculated using s-parameters

When the device is driven in “nonlinear mode” (class A-B, B, C etc..) the ISO contours resemble potatoes. In this case control of harmonic impedances is crucial, because they now become additional test conditions.

Load pulling a device operating in nonlinear mode without controlling the harmonic impedances leads to false results.

The following pictures, measured at the same frequency on the same transistor, show this phenomenon (extracted from [1]).

Figure 1a shows small signal load pull,

Figure 1b shows load pull with fixed harmonic impedances,

Figure 1c shows load pull without harmonic impedance control.

All figures are of the same transistor and frequency, figures 1b and 1c are at the same bias and input power using a mechanical wideband tuner. The contour distortion due purely to dangling harmonic impedances is obvious.

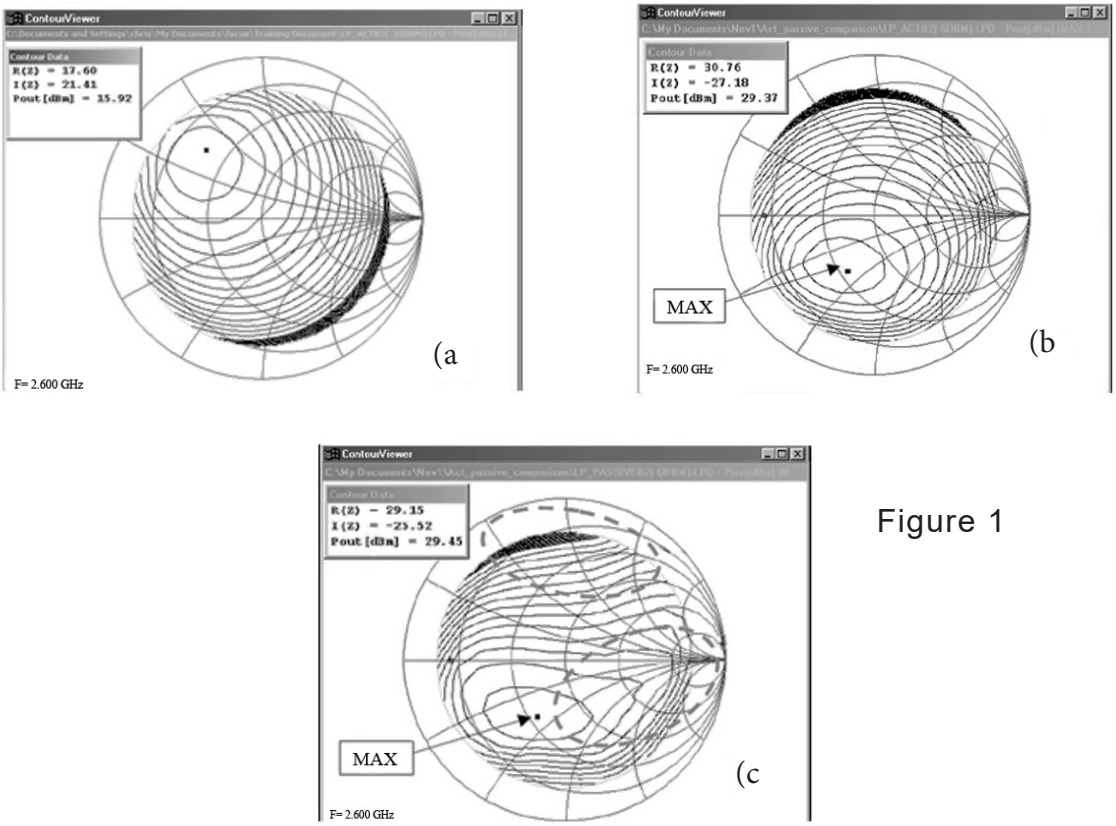

Figure 1

Scalar & Vector Load Pull

Depending on the measuring equipment available and the measurement objectives, we distinguish between traditional or “scalar” and “vector” load pull.

For scalar load pull we only need two power meters, one to measure (through a coupler) the injected power to the DUT and one to measure the power delivered to the load.

Figure 2

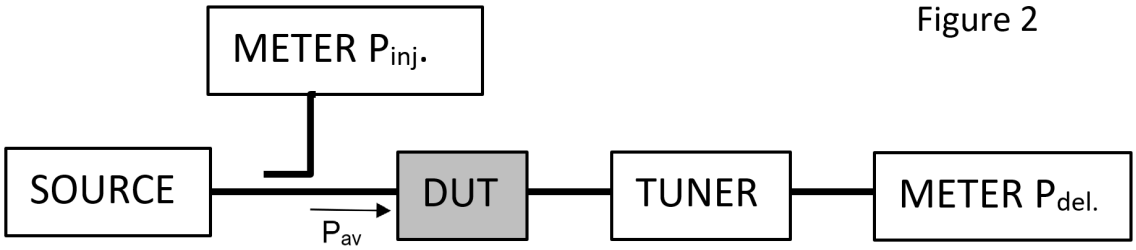

A scalar load pull setup allows measuring output power, transducer gain ($G_T=P_{del}/P_{av}$), transducer efficiency and the spectral quantities (ACPR, EVM), if a spectrum analyzer is used. It does not allow measuring PAE (power added efficiency) and input impedance Z_{in} or Γ_{in} of the DUT. Scalar load pull relies 100% on the accuracy-repeatability of the tuners.

For vector load pull we need directional couplers and a vector network analyzer to measure forward and reverse travelling waves <a>, <b>, and a phase reference calibrator for harmonic component and fully corrected time domain wave forms.

Figure 3

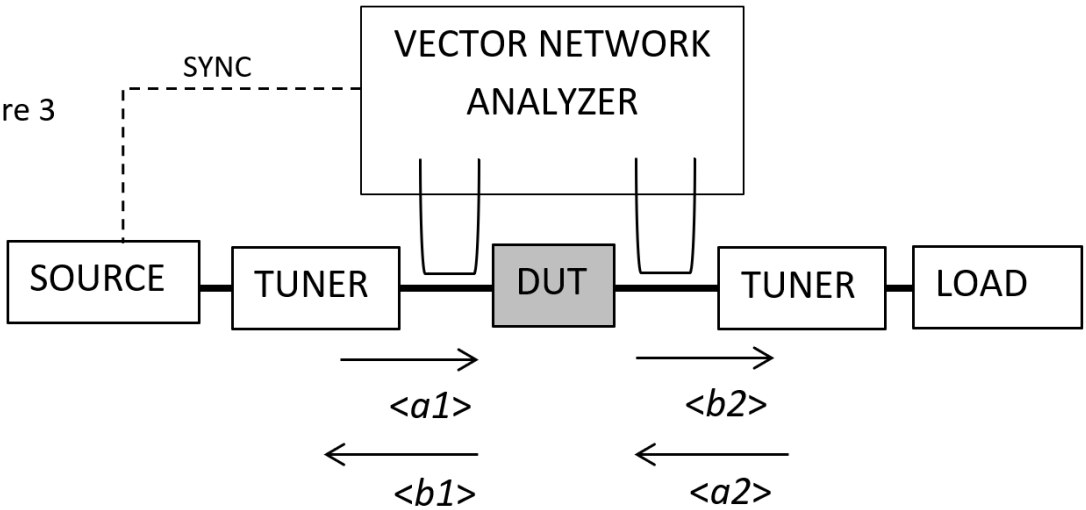

To avoid reducing the tuning range through the insertion loss of the couplers between tuners and DUT one can insert the couplers on the other side of the tuners. This requires higher VNA dynamic range due to signal attenuation by the tuners.

Figure 4

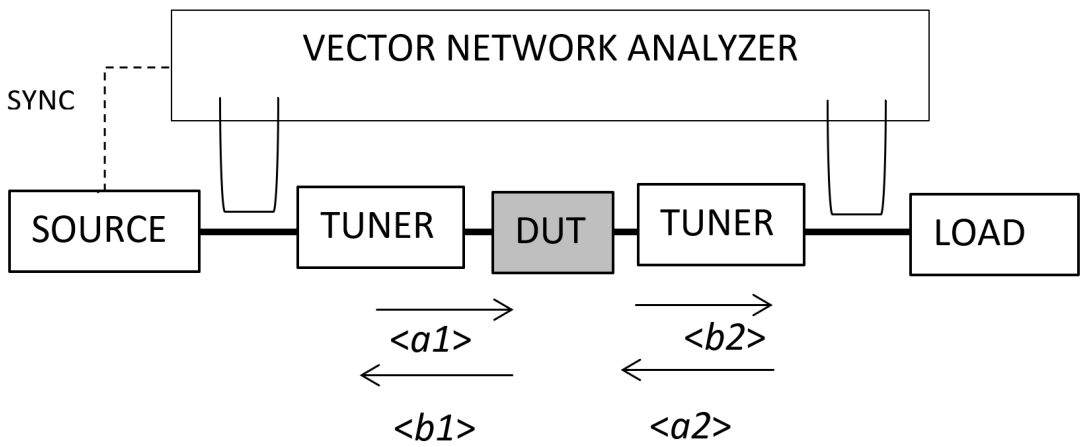

Vector load pull allows measuring the large signal input impedance of the DUT, delivered power to the DUT, transducer and power gain ($G_P=P_{del}/P_{in}$), power added efficiency (PAE) and all other spectral components, same as scalar load pull. Measuring <a> and <b> waves allow vector load pull to calculate the real time tuner impedances presented to the DUT and does not fully rely on tuner calibration and accuracy. However, tuner calibration is useful to be able to steer tuning into the right area of the Smith chart without long search.

Why is Load Pull Needed?

The motivation for investing time and money to put together a complex and expensive load pull setup and making time-consuming tests comes from the increasing requirement for better accuracy and efficiency of the many modern amplifier designs.

In the 70's and early 80's load pull was exotic [2], the privilege of few research institutions. I myself, then, designed my first amplifiers using s-parameters, taken from the transistor datasheet, and I was not alone. But being 20% or more away from the target specs was, then, tolerable. Not anymore. In particular in the era of mobile phones, where the absence of cross-talking of crowded adjacent channels and the talk time on a single charge of a compact battery are key-selling arguments, and whereby one company may sell over 1 million smartphone handsets in a single day, changed everything. Today nobody can afford taking his time and designing within 20% off target, or not meeting, within weeks of launching a product on the market, the competition's specs.

Today all amplifier designs, especially for mobile phones, are based on accurate and extensive load pull data, or nonlinear models, also generated and verified using load pull.

There is a widespread mis-understanding that automatic load pull is about fast and convenient collection of large amounts of exploitable data. In fact, as much as this is helpful, it is not the real reason.

The real reason is that, in a non-calibrated manual load pull system (figures 5 and 6) it is practically impossible to characterize a DUT and, in particular, optimize the matching network. In fact, as the tuner moves, its own loss (and phase) change. The user can only observe the performance of the overall network, "DUT plus tuner". If this becomes optimum (in the case of output power this translates to Maximum) this does not mean the DUT power is maximum, or that the user found the optimum load. Depending on the tuner loss and phase, the optimum may be elsewhere.

It is impossible to identify the location and the optimum performance of the DUT if the tuner is not pre-calibrated, i.e. if its loss and phase transformation are not instantaneously corrected for, during the measurement. It is like walking with closed eyes.

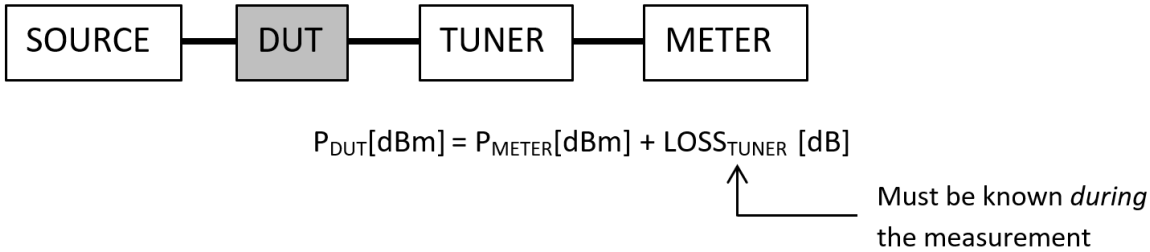

Figure 5: Traditional scalar load pull

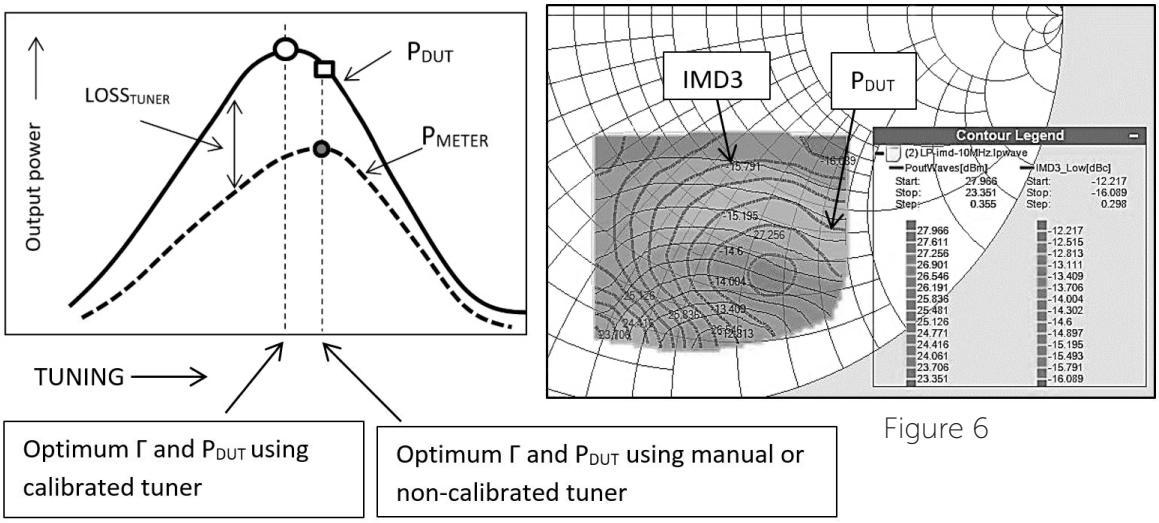

Figure 6

Whereas still today mostly microstrip prototype amplifier modules are load pull tested, in near future entire wafers, with or without amplifier MMIC's, will have to go through this characterization to be qualified, mapped, priced or rejected.

This means two things:

1. Automated "on wafer" tests are necessary.
2. Characterizing chips at high speed (<1 sec/device) at given bias, power, frequency, load and source impedances.

A provider of load pull test equipment, who is not at the front line here, will not survive.

Load Pull Methods

To do load pull, one has to control the impedance (or reflection factor) presented to the device.
In terms of reflection factor Γ, this is the ratio of reflected to injected power wave into the load at each frequency; assuming a two-port (figure 7), Γ_{load} = <a>/<b>. <b> is created by the two-port (device under test, DUT). By controlling <a> we can control Γ.

In the case of a passive load (tuner, case 1) the returning signal <a> is always smaller than <b>, because of losses in the transmission and tuner reflection capacity (tuning range). Therefore |Γ|<1: All load pull impedance points reside inside the Smith chart.

In the cases of active injection (case 2) and hybrid combination (case 3) the returning signal <a> can be larger than <b>, leading to the unwanted condition |Γ|>1: Some impedance points would reside outside the Smith chart: (Re{Z_{load}} < 0). Active load pull algorithms should avoid this situation.

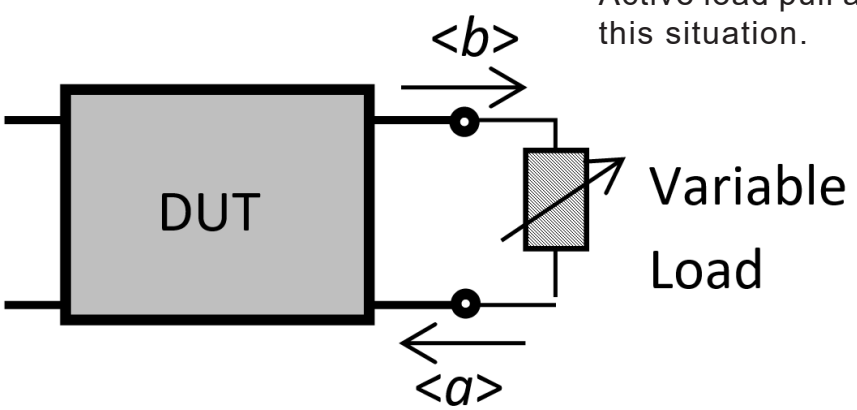

Figure 7

There are three ways for controlling <a>:
1. Reflection on a variable passive load.
2. Injection of an active signal, coherent to <b>.
3. Hybrid combination of 1 and 2.

The maximum limit of |Γ| that can be presented to the DUT is called "tuning range". Tuning range is important, because most microwave power transistors have low internal output impedance Ri, in the range of 1 to 3 Ohms. This corresponds to reflection factors |Γ| of 0.96 to 0.89; (VSWR between 50:1 and 17:1; VSWR
= 50/Ri, |Γ| = (VSWR-1)/(VSWR+1).

Reflection on a Variable Passive Load

A variable passive load is an impedance tuner. The established technology for such devices is the “slide screw tuners”; these are made of a slotted, low loss airline, mostly in form of a parallel plate airline (slabline), inside which reflective probes are moved. The probes are made of metal or metallized plastic, are capacitively coupled with the center conductor and create a variable capacitive load and strong field deformation. The probes have a concave bottom which matches the cylindrical center conductor.

The wings of the bottom contour of the tuning probes extend below the center of the center conductor to capture a maximum of the electric field, which is concentrated between the center conductor and the side walls. Approaching the probe to the center conductor vertically controls the amplitude of Γ and moving it horizontally controls the phase Φ; (Γ = |Γ|*exp(jΦ)).

The overall accuracy of the system relies on mechanical repeatability of positioning the tuning probe. The mechanics of such tuners is ambitious, because sufficient accuracy and mechanical repeatability at high VSWR is possible only if the small gap between probe and center conductor (of the order of 50 µm ≈ one hair width) can be kept constant over horizontal probe movement of more than one half of a wavelength at the lowest frequency of operation

(λ=300mm/freq[GHz]), λ/2(1GHz)= 150mm; this is required in order to be able to cover 360º of reflection factor phase control; or a free (not regulated) XY movement control tolerance of 50±5µm/15cm≈±33ppm.

Figure 8 shows a tuning probe in the slabline.
Figure 9 shows typical tuner VSWR sensitivity: VSWR=(1+|Γ|)/(1-|Γ|).

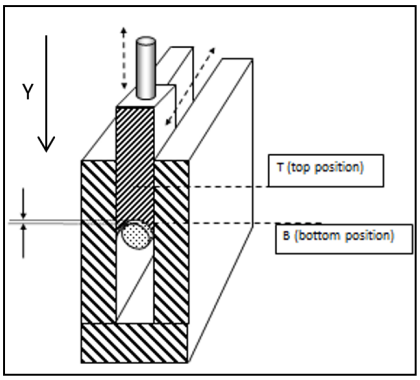

Figure 8: Tuning probe

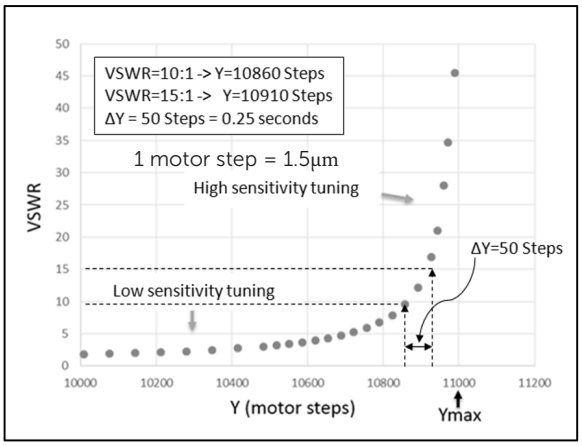

Figure 9: VSWR vs vertical probe position

The tuners are automated using remotely controlled stepper motors and gear. All tuner operations are described logically using motor steps (X, horizontal, Y vertical). Typical mechanical resolution is 2000 to 5000 horizontal positions and 1000 to 2000 vertical positions, corresponding to 2 to 10 million possible tuner states. During tuner calibration on a VNA, s-parameters for a fraction of above states is measured and saved. The horizontal and vertical probe positions are selected such as to cover the Smith chart homogenously and are saved in calibration files for each frequency. Each calibration file contains, typically, from 400 to 1400 points. 2D interpolation routines allow synthesizing the several millions of possible tuner states with vector accuracies exceeding 40dB (or <1%).

During measurement, the tuner is connected to the output port of the test fixture holding the DUT, or, using a cable or a low loss airline extension to the wafer probe, and the output of the tuner is connected to a measurement instrument. Data collected are de-embedded to the DUT reference plane (corrected for tuner and setup loss and phase offset from the tuner to the DUT) and saved in a load pull file.

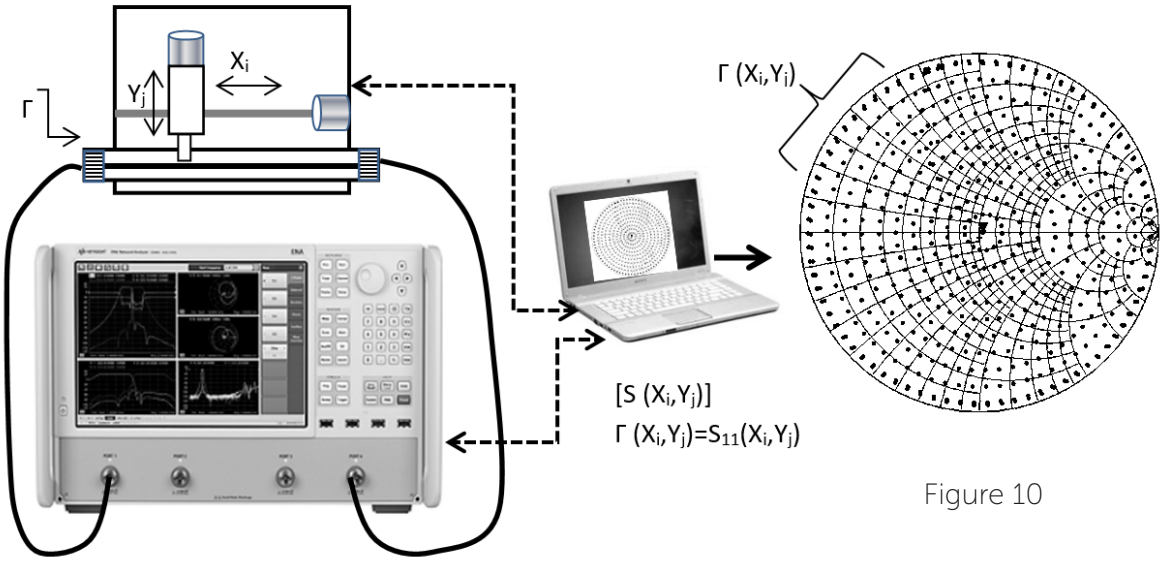

Figure 10

Injection of Coherent (Active) Signal

There are a number of basically distinct ways for creating a “virtual” load, i.e. creating a return signal at the DUT output without using a real (passive) reflection:

The “Split Signal” method.

This method, first introduced by Takayama [3] consists in using a power splitter after the input signal source and sending part of the signal into the DUT input and part into the output, after amplifying and phase-controlling it.

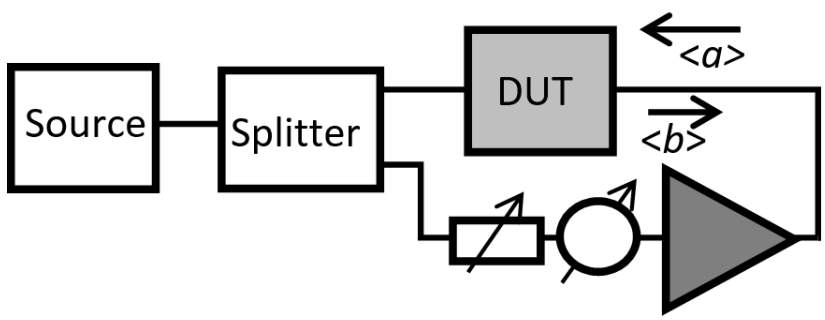

Figure 11

Takayama’s method allows $|\Gamma| = |\langle a\rangle/\langle b\rangle| \geq 1$ and has the advantage of using a single source, but requires continuous attenuation and phase control of the feedback signal, not available automated. It also needs, if implemented, attenuation and phase control algorithms to keep the load impedance constant when measuring Pin/Pout saturation plots, since the gain and phase of the feedback amplifier do not track those of the DUT, and by consequence the ratio $\langle a\rangle/\langle b\rangle$ does not remain constant. Without instantaneous impedance measurement and fast analog attenuation and phase regulation of the feedback signal, to keep Γ constant during power sweeps, Takayama’s method is of no use, but in the 70’ties it opened the door to active injection load pull.

The “Active Load” method.

This method (figure 12) is a closed loop configuration, and uses a coupler at the output of the DUT, sampling part of the signal and reinjecting it into the DUT, after amplifying and adjusting its amplitude and phase, same as Takayama [3]. This method is relatively simple, but, because of the closed loop in the active load, it bears risks of spontaneous oscillations of the feedback loop through the directivity (leakage) of the coupler. If the feedback amplifier is large enough, saturation plots will not need autocorrection algorithms, as Takayama. This simplifies the implementation.

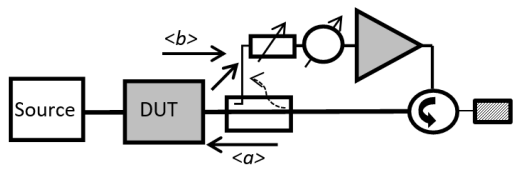

Figure 12

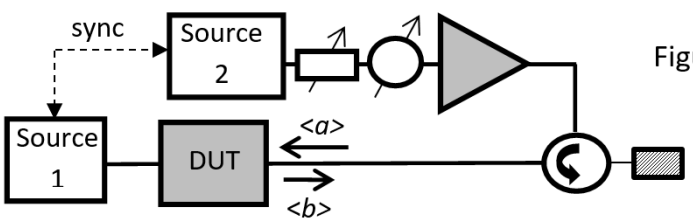

Figure 13

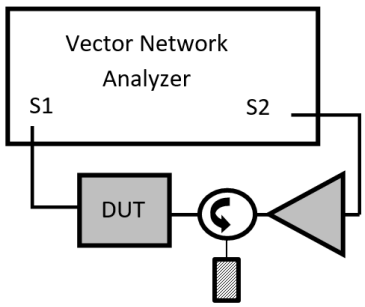

Figure 14

“Open Loop” Active Injection

This method (figure 13) requires a second signal source, which is synchronized (phase coherent) with the primary source. If the second source is amplitude and phase controlled, an extra variable attenuator and phase shifter will not be required in the feedback injection loop. Since synchronization of both sources occurs at a base frequency around 10MHz, we can speak of an “RF open loop” system.

This is the case when the second source is the vector adjustable second source of a VNA (figure 14), the external attenuator and phase shifter can be spared. Isolators are used to protect the feedback amplifiers.

“Hybrid” Combination

A general shortcoming of the “pure” active solutions is the requirement for high power feedback amplifiers, for the simple reason that the amplifiers, including their protection isolators, have an internal impedance of 50Ω, whereas the DUT has an internal impedance Ri of 1-3Ω. We obviously face a strong mismatch situation here, that requires excessive feedback power to overcome (figure 15): Since Vo/Vi=(50+Ri)/Ri: Po/Pi≈50/Ri+2; assuming Ri=3Ω gives Po≈18.7*Pi or 13dB higher. In case of Ri=1Ω this ratio becomes ≈17dB. Or, in order to inject 1Watt into the DUT we would need ca. 19W or 52W respectively.

AMPLIFIER NEEDED FOR ACTIVE SYSTEM:

$$\mathbf{P_{AMP}/P_{DUT} \approx 50\Omega/R_{DUT}+2}$$

Example: P_{DUT} = 5W; R_{DUT} = 2Ω → P_{AMP} = **135W**

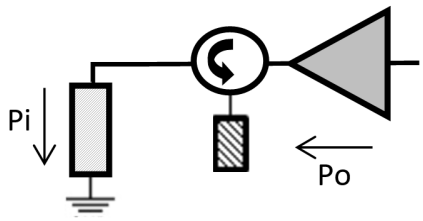

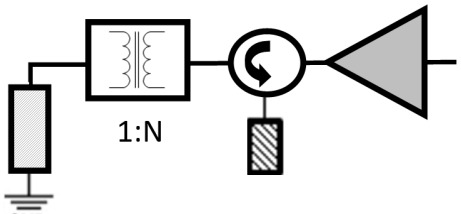

Figure 15

This, often not spoken of, obvious, bottleneck, can be alleviated using a "hybrid" configuration.

In this case some form of impedance transformer (figure 15) is needed to pre-match the amplifier's internal impedance to the DUT's, such as: (a) employing a pre-matched test fixture (using either single stage λ/4 transformer, or, for higher bandwidth, multi-stage transformers or Klopfenstein wideband ramped transformers, figure 18) or (b) using adjustable transformers in form of impedance tuners. Fixed transformers are usually made on microstrip substrates, are cheap and low loss, but inflexible. They must be redesigned and made for each device and frequency range. Klopfenstein transformers have a fixed ratio and create a 50Ω image only on the real axis. Tuners (figure 17) are adjustable and wideband, but have, at high VSWR, considerable loss. When employing tuners and in order to minimize the feedback power, one has to compromise between transforming ratio (VSWR) and tuner loss (figure 16).

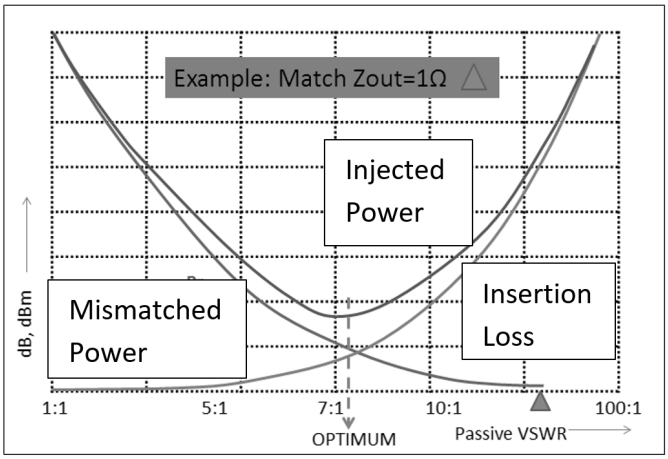

Figure 16: Requirement for injected power as a function of insertion loss and tuner pre-match

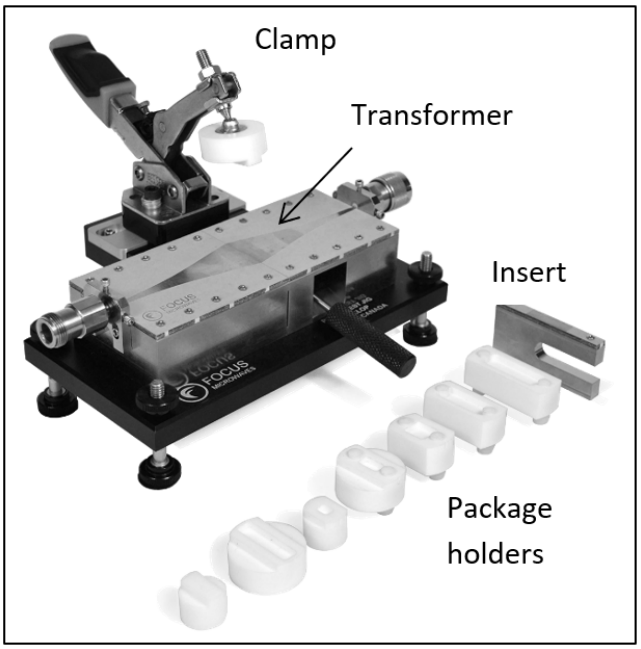

Figure 18: Klopfenstein test fixture 10Ω, 1-10 GHz

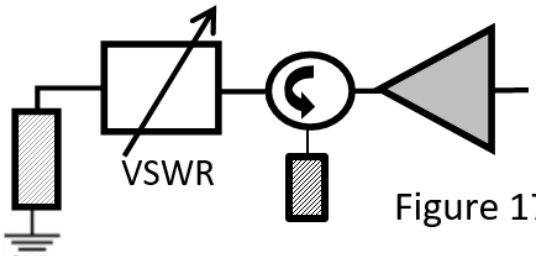

Figure 17

Several experiments with impedance tuners at various frequencies have shown that an optimum VSWR for maximum power transfer between the amplifier and the DUT is approximately 7:1.

In this case the realistic power of the amplifier, needed to match the DUT output power is, considering losses, mismatch, fixtures etc. approximately double (or ~3dB higher) than the DUT power. Or, in the case of Ri=1Ω, the impedance mismatch of 50:1 becomes 7:1x7:1 and in case of 2Ω from 25:1 it becomes 5 : 1 x 5:1.

TUNING METHOD	COMPLEXITY (**)	COST	GAMMA	SPEED	BAND-WIDTH	POWER	MODULATED SIGNALS
PASSIVE	LOW	MED	MED	LOW	HIGH	HIGH	NO
ACTIVE	HIGH	HIGH*	HIGH	HIGH	LOW*	MED*	YES
HYBRID	HIGH	HIGH	HIGH	HIGH	LOW*	HIGH	YES

Table I: Comparison of tuning methods

*DUE TO COST AND BAND LIMITATIONS OF POWER AMPLIFIERS.

**ACTIVE SYSTEMS REQUIRE CAREFUL HANDLING TO AVOID DAMAGING THE ACTIVE COMPONENT (DUT).

It is clear that a hybrid system, that can be operated also as simple active or simple passive system***, combines most advantages, but at a price. The best systems, from the user point of view, are systems that can be upgraded, from active or passive to hybrid.

(***) this operation offers easy confirmation of system accuracy: at the same pure active or pure passive load the measured result must be the same.

Therefore, depending on requirement and budget, the choice of system is easier.

Impedance Tuners

The equipment required to manipulate the impedance presented to the DUT (device under test, mostly transistor) are impedance tuners. Impedance tuners are used to sweep a large area of the Smith chart, because power is not the only characteristic of interest. Many other parameters, like Efficiency, Intermodulation, Adjacent Channel Power, EVM and more are meanwhile critical for multi-channel communications.

We can distinguish three basic tuner types:

a) Passive
b) Active
c) Hybrid (combination of active & passive tuners

Each tuner type has its advantages and shortcomings, in particular when the practical needs of industrial users are concerned. In any case the main interest is for automatic or programmable tuners, i.e. tuners that can synthesize on request any specific impedance.

Manual, or not programmable tuning, is a process of “trial and error”. An additional shortcoming of manual tuning lies in the fact, that the operation cannot optimize the DUT itself, rather it allows optimizing the assembly “tuner + DUT” without the possibility of actual phase and amplitude correction. In short, manual tuning does not allow finding the real optimum DUT performance.

Passive Tuners

Historically [2] passive tuners were made of two λ/4 long donut shaped dielectric resonators travelling on the center conductor of a coaxial slotted airline (figure 19). Changing the distance between the resonators creates a butterfly kind of trajectory, whereas moving both resonators along the airline changes the angle of Γ. The tuner has the advantage of easy manufacturing and alignment. It is by nature bandwidth-limited (1 octave) and 50Ω is not its natural re-treat state; instead 50Ω is an impedance to be synthesized frequency by frequency. This means test devices are always at risk of oscillation. For these reasons this technology was abandoned in early 1990.

Automatic slide screw tuners were initially made using a slotted impedance bridge, where the E-field sensor was replaced by the capacitive metallic probe (slug), figures 20 [4] and 21.

The first tuner of this kind was published in 1984 by the University of Leeds in the UK. The tuner was based on a HP precision slabline bridge model 809B/810B used for measuring standing waves and impedances. Meanwhile this technology has come a long way. From the original 1.8 to 18GHz tuners of 1987 we have now (2018) coaxial tuners covering 1-50GHz and 20-110GHz.

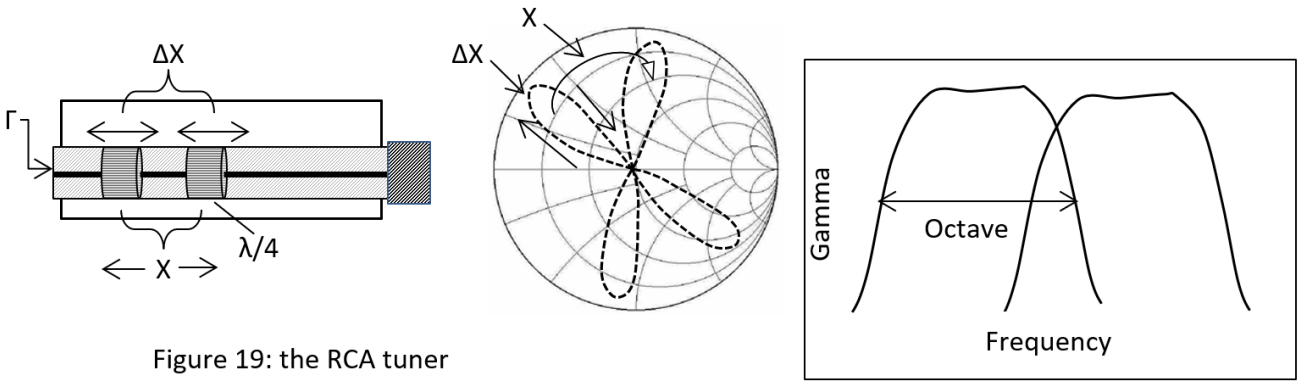

Figure 19: the RCA tuner

The present passive tuners are based on the slide screw principle, meaning the reflective (metallic) tuning probe was moved vertically towards the center conductor to control the amplitude and horizontally along the slabline to control the phase of Γ

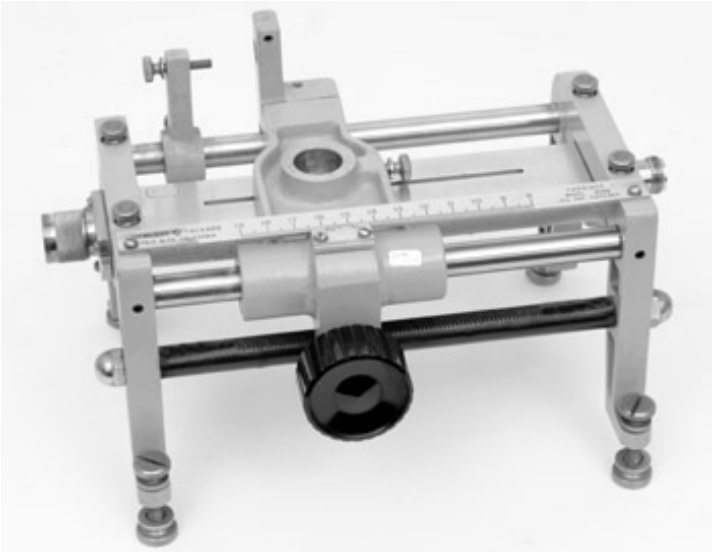

Figure 20 [4]

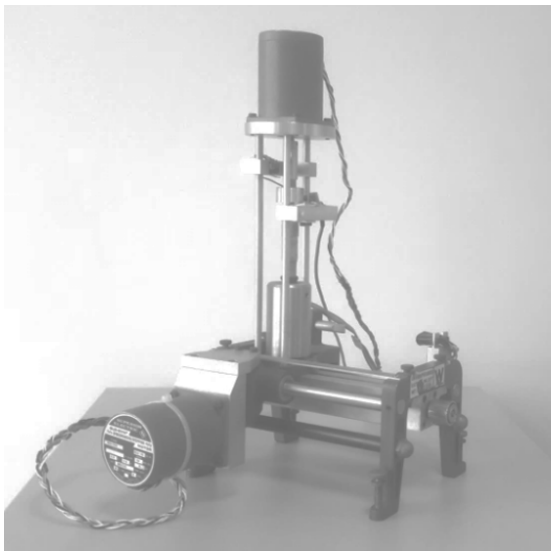

Figure 21: courtesy University of Leeds

These tuners behave exactly opposite of the RCA two-donut tuners:
a) they are very wideband,
b) their natural retreat state is close to 50Ω, but they are demanding in manufacturing precision and alignment.

Figure 22: Wideband tuner (25-50GHz, $VSWR_{MAX}$ >30:1)

Electronic (passive) Tuners

A passive tuner, based on fast ON and OFF electronic switching of a series of capacitors (mostly using blocks of PIN diodes followed by fixed capacitors or Varactor diodes) has been introduced in the 80's by ATN Microwave [5] and used initially for noise figure and noise parameter measurements. Those tuners where very fast and repeatable but came out of fashion since around 2000, because of limited power handling, tuning resolution and bandwidth and the concurrent evolution of mechanical tuner solutions.

Figure 24: Example of tuning pattern of electronic tuner at 1.5GHz [6]

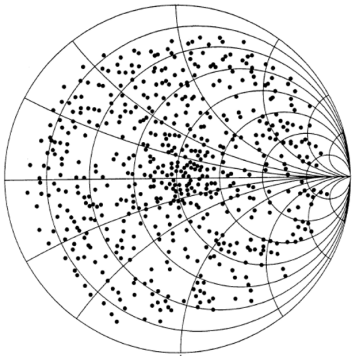

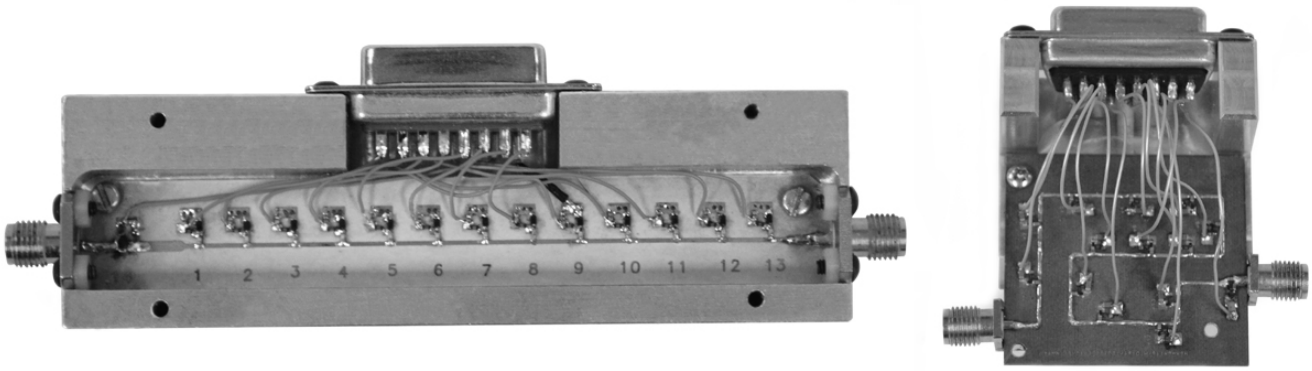

Figure 23: Electronic tuner prototypes with 14 diodes mounted at equidistant and non-equidistant spaces along the microstrip transmission line.

PASSIVE TUNER TYPE	COMPLEXITY	COST	GAM-MA	SPEED	BAND-WIDTH	POWER	MODULATED SIGNALS
ELECTRONIC	HIGH	HIGH	MED	HIGH	MED	MED	NO
ELECTRO-MECHANICAL	LOW	HIGH	HIGH	LOW	HIGH	HIGH	NO

Table II: Electronic vs electro-mechanical tuners.

Wideband Tuners

Each tuning probe (slug) in a tuner creates sufficient high reflection (>0.85) over a certain frequency band; depending on the detail structure, the manufacturing precision and the alignment effort invested, a single probe can cover a range of up to 2, even 3 octaves (Fmax:Fmin = 4 or 8).

wider tuning probes, causing an upper frequency limitation, because of self-resonance. Decade long simulations and trial and error experiments have brought the technology to its limits with what is available today.

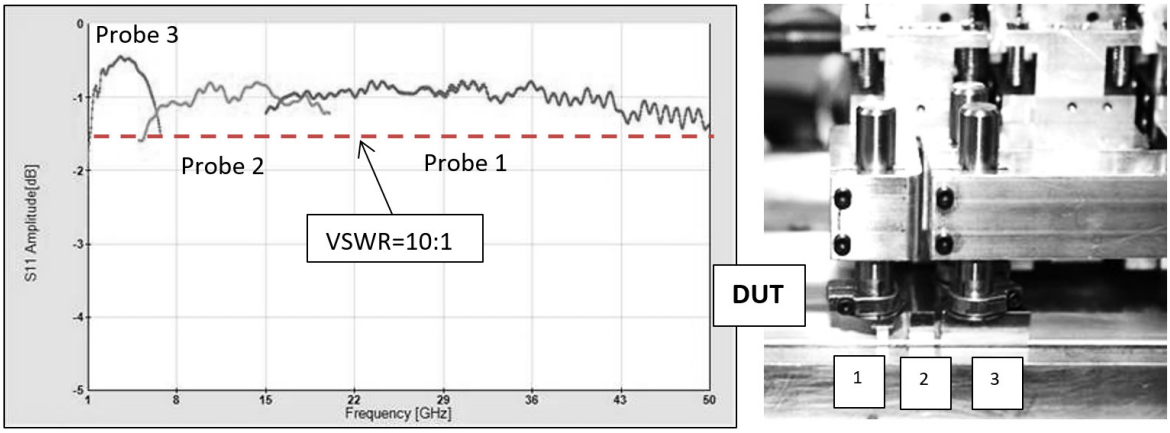

Figure 25: Maximum reflection of wideband 3-probe tuner and associated mechanics

Tuners combining two or more probes in the same slabline can reach instantaneously Fmax:Fmin ratios of up to 45 or 50 (example , 3 slug tuner covering 0.4 to 18GHz or 1 to 50GHz). Other examples of wideband tuners operate instantaneously from 2 to 67GHz etc. The final limitations of the technology are: a) the width of the slug which limits the maximum obtainable capacitance at low frequencies, b) the cutoff frequency of the transmission line (slabline) which requires smaller structures and center conductors with smaller diameter, thus

Figure 26: 3-probe tuner covering 1-50GHz

High Power Tuners

High power transistors are, usually, made by paralleling several cells. This, obviously, reduces the output impedance, down to 1Ω or less. It is therefore of outmost importance to be able to characterize (or conjugate match) such devices. As can be seen from figure 9, reaching the high VSWR (50:1) required using slide screw tuners, means bringing the tuning probes (slugs) very close (30-50µm) to the center conductor. At this point the electric field becomes very high, reaching values close to sparking (Corona discharge, or 3kV/cm). In addition, the free-hanging center conductor absorbs power, caused by RF tuner loss and DC resistance, heats up deforms, creating a galvanic short with the close-by tuning probes. This is a typical problem with tuners operated at very high RF and DC power (several hundred of Watts).

Heat can be created on the center conductor itself or at worn out or badly aligned connectors which feed the heat to the center conductor. APC-7 and SMA connectors are to be avoided versus 7/16 or N type connectors; APC-7 because of sensitive contact, SMA because or generally poor quality of the connecting surfaces.

In general, harmonic tuners are more sensitive to high power because the "slenderness factor" (length-to-diameter ratio L/D), of the center conductors is longer and the mechanical stability lower. Long metallic rods "buckle" under compression much easier than short ones. The rod stability decreases with (L/D)2 [8].

To avoid such phenomena, it is advisable to use pre-matching test fixtures comprising the DC bias circuit and operate the tuners at lower VSWR, or use special high-power tuners. Focus has developed low expansion center conductors as well as airflow and mineral oil submersion techniques for cooling the center conductor [7,9,10].

In general, power handling of slide screw tuners decreases with frequency and VSWR for obvious reasons:

a) High frequency means thinner center conductor and high RF tuner loss.

b) High VSWR means high tuner loss and small gap between tuning probes and center conductor.

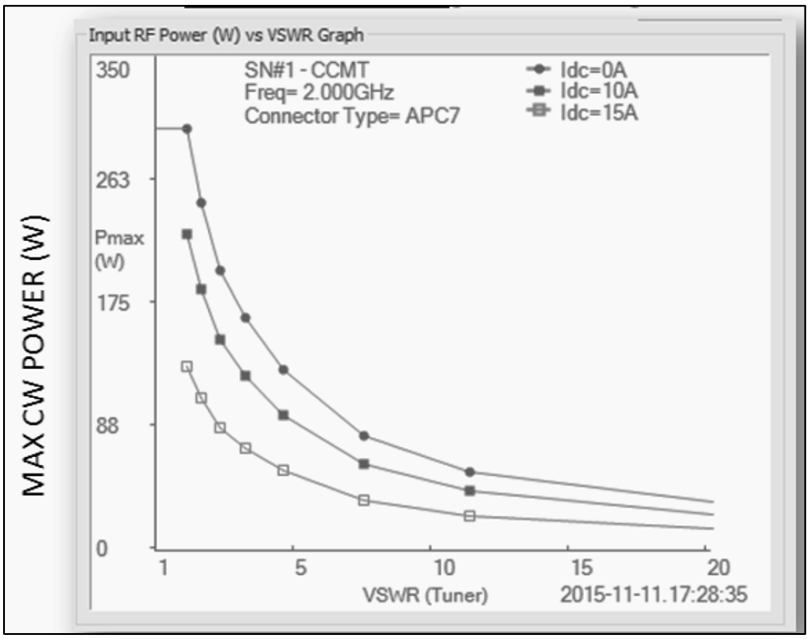

Figure 27: Example of tuner power handling

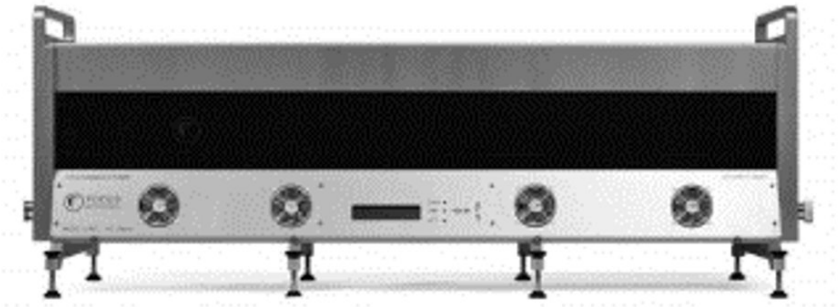

CCMT-303-UHP (0.3-3GHz)

CCMT-975-UHP (7.5-9.5GHz)

Figure 28: Examples of 500 Watt (DC + RF CW) power tuners

Harmonic Load Pull

Harmonic load pull is the measurement method whereby the impedances presented to the DUT at harmonic frequencies 2fo, 3fo etc. of the fundamental injected frequency fo are controlled. To do so one needs either a test fixture with built-in fixed harmonic loads, such as λ/4 parallel stub resonators (also called harmonic traps, because they stop harmonic energy to propagate and reflect it back into the DUT) or harmonic frequency tuners. Again, harmonic tuners can be active, passive or hybrid. In the case of active harmonic tuners at least one harmonic frequency signal must be injected into the output of the DUT.

Of course, the combination of fast active tuning with passive power pre-matching is, conceptually, the optimum solution. And, again, the best alternative from the user point of view are “upgradable” systems, from pure passive or active to hybrid. One of the least complex harmonic load pull solutions, combining high speed active tuning with reduced injected power is the combination of passive harmonic tuner with active fundamental power injection (figure 29).

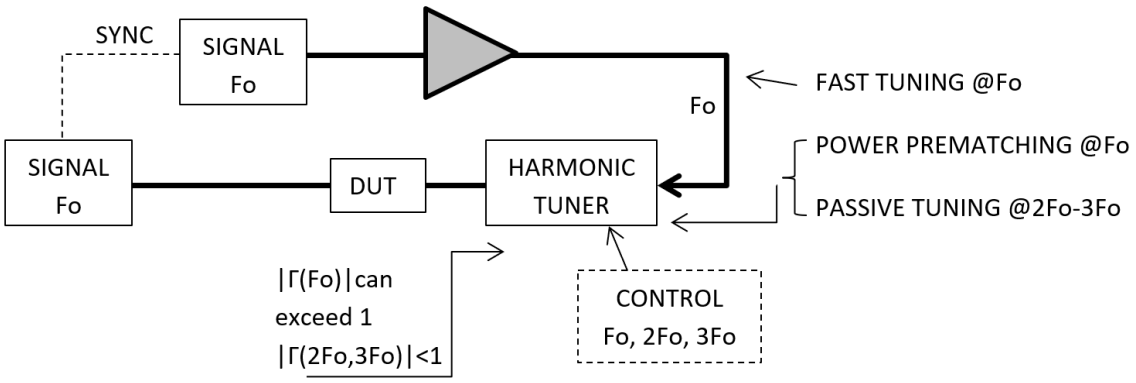

Figure 29

Harmonic Tuning

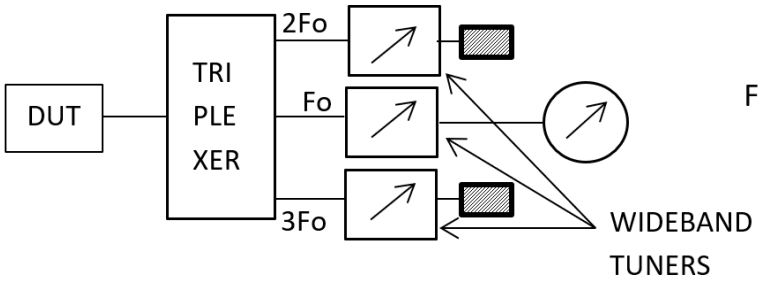

Figure 30

Up to circa 1998 and because of the inherent wideband nature of the slide screw tuners, it was thought, impossible to make harmonic mechanical tuners. Harmonic load pull employed wideband tuners and frequency discriminators (Di- or Tri-Plexers), figure 30.

The method has shortcomings: Harmonic Triplexers are:

(a) Difficult to find
(b) Have limited bandwidth
(c) They have in-band insertion loss
(d) They have high reflection outside the bands

This reduces the tuning range and creates risk of spurious DUT oscillations. The method has been the only solution in the 90's but is now practically abandoned.

Harmonic Rejection Tuners (PHT)

The Harmonic Rejection tuners [11, 12] have been introduced in 2000. The concept is simple: A number of λ/4 open stub resonators slide along the center conductor of the slabline and create a rotating short at the resonant (harmonic) frequency. i.e. we can present to the DUT a short with adjustable phase at a harmonic frequency with limited effect on the fundamental, which is sufficient for most applications.

There are two problems:
(a) the frequency coverage is only around 5% and
(b) tuning at 2fo affects tuning at fo, because of the not high enough Q factor of the used components.

The problems were solved (b) using double resonators, fundamental back-tuning and (a) using simple manual ex-change of resonators [13].

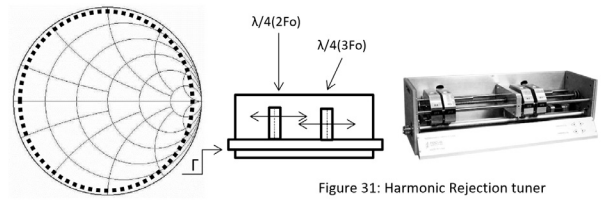

Figure 31: Harmonic Rejection tuner

Harmonic Rejection tuners are inserted between DUT and wideband tuner to catch any harmonic power (2fo, 3fo…) created by the DUT and reflect it back into the DUT, while allowing the fundamental wave (fo) to travers freely (figure 32). They have been popular between 2000 and 2008; several users own dozens of resonators and replace them when switching frequencies. The tuners do not cause spurious oscillations (their low frequency reflection is zero) and reduce the fundamental tuning range only moderately (because of low insertion loss of the airline).

Typical PHT test setup is as follows:

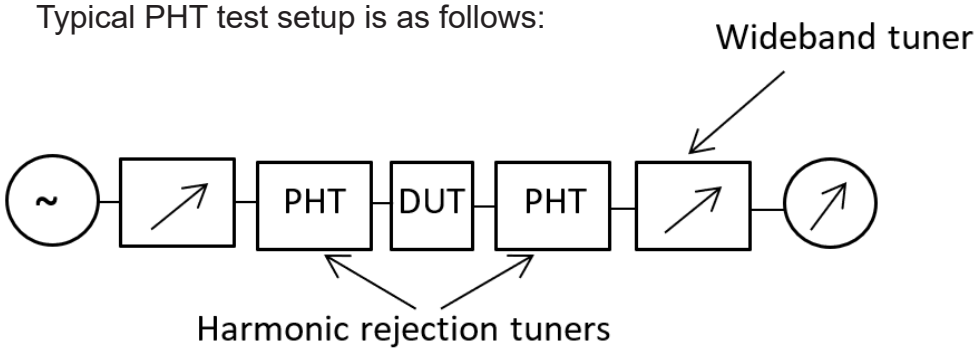

Figure 32

Wideband Multi-Harmonic Tuners

In 2004 the new concept of multi-purpose tuner (MPT) [16] was introduced. This tuner uses three independent wideband probes (slugs). It was developed as a mechanically stable unit, to be operable on-wafer without breaking the wafer-probes by tilting, caused by horizontal movement of the massive carriages. By placing the 3 probes 120° apart we can tune by moving the slugs only vertically. Because the slugs are wideband, this device could also operate at different frequencies by re-arranging the horizontal positions. But still, this is all single frequency.

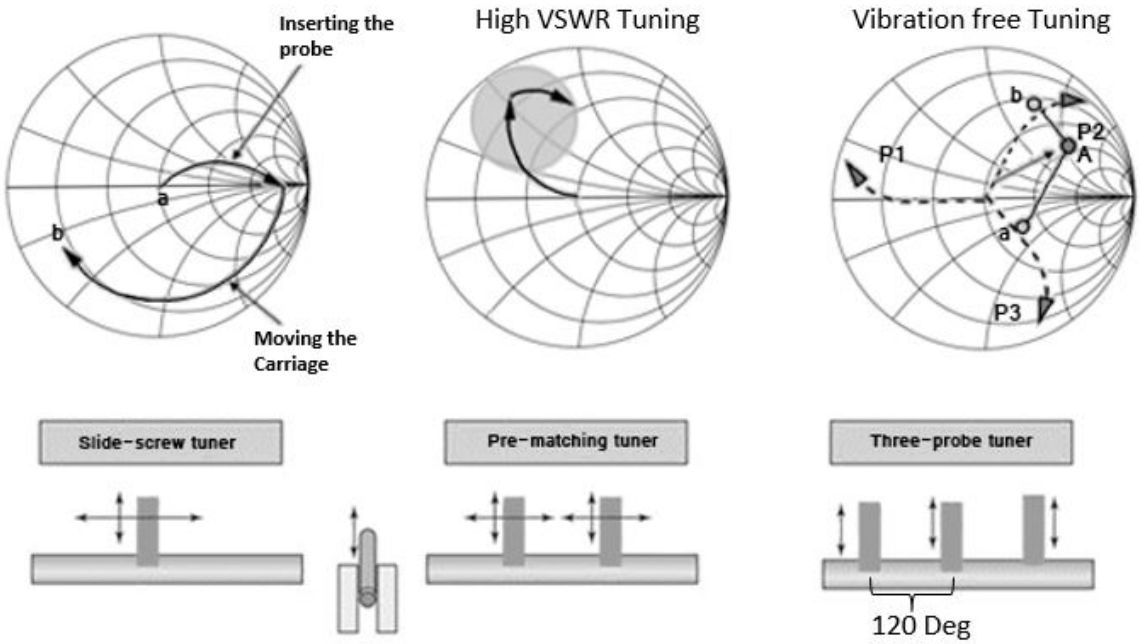

Figure 33: Basic operation of single, double and triple probe tuner.

Multi-harmonic tuners are possible using wideband non-resonant probes. Based on an idea first introduced by ATN Microwave [14] using an electronic, PIN diode-based tuner, a search algorithm allows independent tuning at two or three harmonics out of millions of possible combinations, that is, finding tuner settings synthesizing simultaneously two or three user defined harmonic impedances. First PIN diode based devices were crude and targeting impedances were unfocused. Harmonic rejection tuners [12] mentioned above displaced harmonic electronic tuners on the market in the early stages (approx. year 2000).

Then, later in 2004, came the idea of using the trillions of possible tuning states, available because of the permutations of horizontal and vertical resolution of the mechanical gear of three independent slugs [15]. Typical maximum numbers of motor steps are 2000 in vertical and 6000 in horizontal direction, or $12*10^6$ per slug or, for 3 slugs, $12^3*10^{18} \approx 1{,}7*10^{21}$ combinations per frequency. It was heuristically assumed that this kind of number of states would include solutions for tuning accurately enough at 3 frequencies anywhere on the Smith chart. All experience to date shows this to be true, though we do not have analytical proof of that.

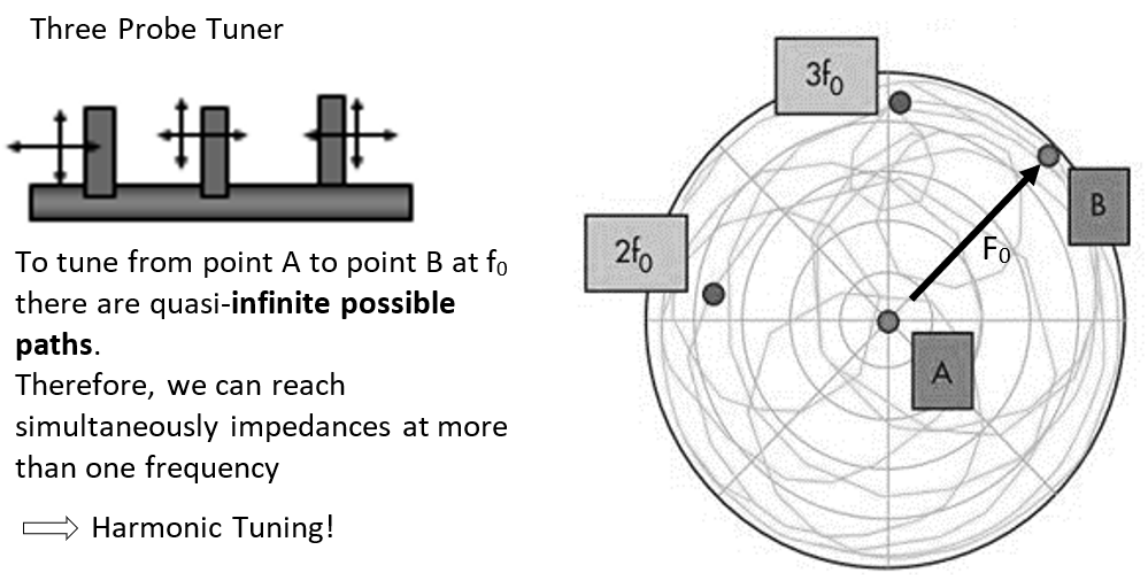

Figure 34: Wideband frequency response (S11) of MPT

Figure 34 shows the complex multiple reflection trace of the multi-probe tuner reflection factor as a function of frequency. The tuning search routine must find the path from A to B, that includes the arbitrarily defined harmonic impedances Γ(2fo) and Γ(3fo).

More than that, it has been experimentally shown that, a two-carriage two wideband probe tuner tunes everywhere on the Smith chart and within the frequency coverage of the wideband probes at two harmonic frequencies and that four probes tune impedances at 4 harmonic (or not) frequencies (figure 35). In fact, two probes can tune at three frequencies, but leave blank areas on the Smith chart, the same with three probes and four frequencies. Why is that so? We do not know (yet).

Finding tuner states for harmonic impedances all over the Smith chart, is possible using today's high-speed personal computers within 2 seconds, with a vector accuracy exceeding 40 dB (1%). Because of the necessity to move three probes, real tuning time is longer, up to 10 seconds, faster with increasing frequency, because of shorter tuner movements.

Multiple models of such tuners are available for frequencies between fo=200 MHz (3fo=600MHz) and fo≤36GHz (3fo≤108 GHz) over large instantaneous bandwidths. These tuners can be operated also as single frequency wideband tuners from (0.2GHz < fo < 6GHz) to (20GHz < fo < 110 GHz) or dual frequency tuners (fo and 2fo), in which case fo can reach 55GHz. The harmonic tuners can create all harmonic impedances continuously at all frequencies inside the operation band without hardware interventions, other than with harmonic rejection tuners (PHT).

A useful application of multiple probe tuners is single frequency high Gamma tuning. If one slug is used as a pre-matching section, the second slug can tune around it and reach very high reflection factor in a selected area of the Smith chart (figure 33). Reflection factors as close to 1 as 0.99 (VSWR ≈ 200:1) at tuner reference plane have been reached at low frequencies.

Figure 35: Four-probe four-harmonic frequency tuner 1.2-10GHz

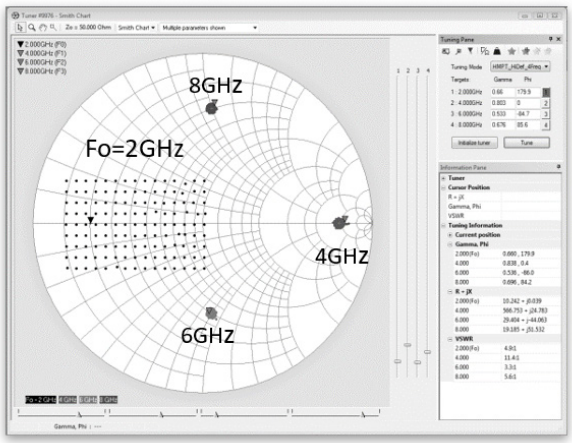

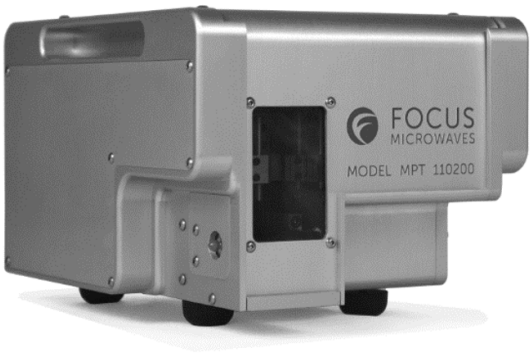

Figure 36: Example of three harmonics tuner (20-110GHz)

A critical reader, would wonder, how this, quasi infinite, number of tuner states are calibrated. This is possible using the de-embedding tuning algorithm [16], in which case for 1200 calibrated points per tuning probe, instead of $1200^3 \approx 1{,}7*10^9$ calibration points one only needs to calibrate 3*1200=3600 points.

Tuners For On-Wafer Load Pull (Delta Tuners)

Except for limited tuning speed, electro-mechanical tuners have superior performance, such as high-power handling and multi-octave bandwidth compared to all other solutions, except for tuning range. Whereas tuning range of the tuners themselves is enough (VSWR ≥ 30:1), when integrated in wafer setups the loss of the cables and probes reduces the VSWR to values ≈ 6-7:1, which is often insufficient.

DELTA tuners:

1. Create higher Gamma on-wafer.
2. Reduce impedance skewing**.
3. Reduce hybrid feedback power.

Extended slablines (picture insert) have alleviated the problem, because they are less lossy than cables, but do not represent the best compromise, since the tuning probe (slug), which creates the reflection, is still inside the tuner body far away from the DUT. A new tuner type, the “DELTA” wideband and harmonic tuners solve this problem: in these tuners, designed mainly for 5G applications (10-67GHz), the slabline is short, in line and in direct contact with the wafer probe and the tuning probe is immediately adjacent to the tuner test port. This allows VSWR at DUT reference plane higher than 10:1 at 30GHz, which is enough for many 5G applications.

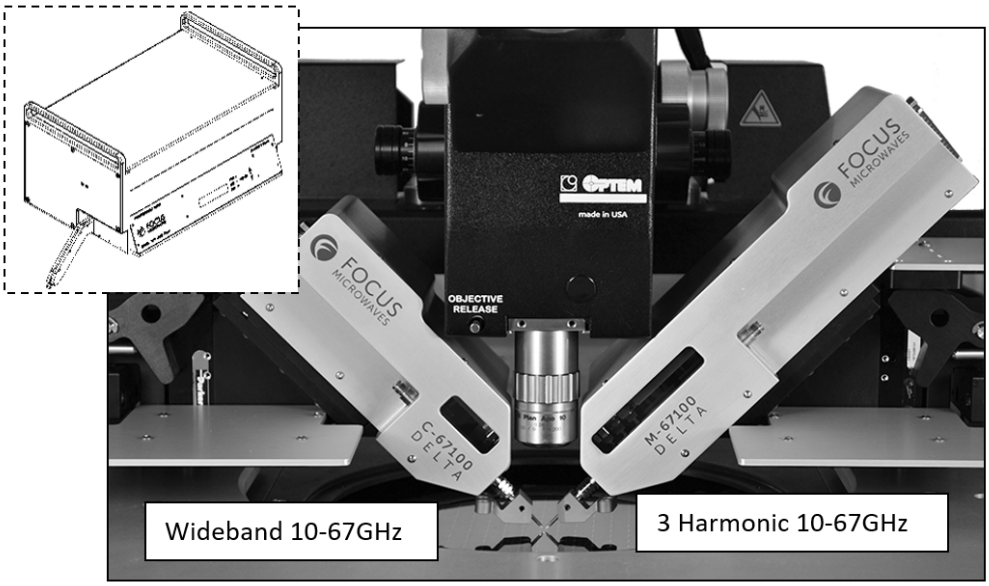

Figure 37

1. Higher Gamma on Wafer

The reflection factor Gamma.DUT presented to the DUT is the reflection factor Gamma.PROBE, created by the tuning probe inside the tuner, reduced (approximately) by the insertion loss of

(i) the transmission line section inside the tuner,
(ii) the test port adapter,
(iii) the cable or bendline between test port and wafer-probe,
(iv) the wafer-probe and its adapter.

DELTA tuners reduce item (i) and eliminate items (ii) and (iii).

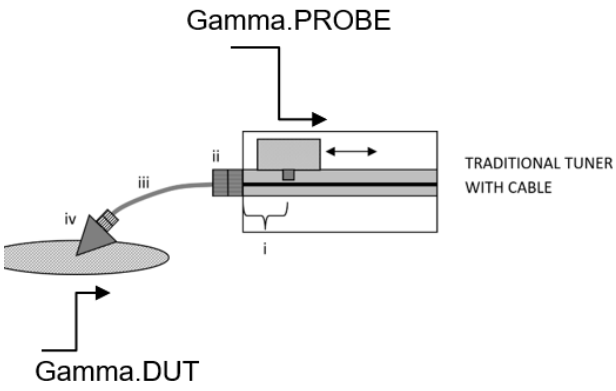

Figure 38

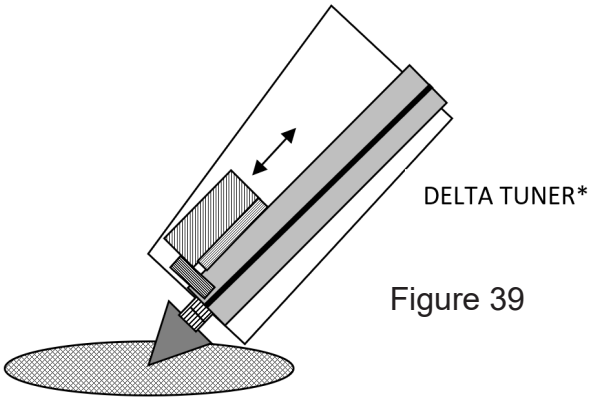

Figure 39

(i) DELTA tuners are made using miniature carriages and brackets that allow the tuning probes to be placed *immediately next to the test port.*
(ii) There are no test port *adapters.*
(iii) There are *no cables or bend lines.*

2. Reduced Impedance Skewing

Impedance skewing or spread comes from the fact that the phase of the reflection factor changes with frequency. The phase of a passive reflection is $\Phi=-4*\pi*Lel/\lambda$, whereby L_{el} is the electrical length of the section between the test plane (DUT reference) and the reflective element (in our case the tuning probe). Converted in degrees this gives:

$\Delta\Phi[^o]=-0.024*L_{el}[cm]*\Delta F[MHz]$.

It is to notice that $\Delta\Phi$ does not depend on the frequency f itself, only of the modulation frequency Δf. Therefore, the shorter Lel the smaller $\Delta\Phi$. Or, the skewing due to the tuner assembly in DELTA tuners, is approximately 10 to 20 times smaller than in tuners with cable or bend-line (L_{el}.DELTA~1-2cm, L_{el}. TUNER~10-20cm [items (i), (ii) and (iii) above]).

This enables and of course simplifies Intermod and multi-tone testing using passive tuners only.

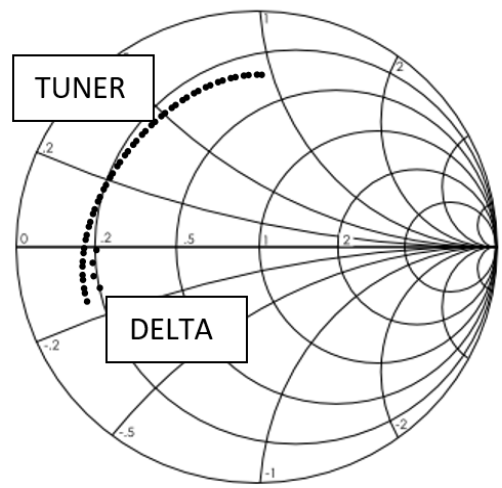

Figure 40

Lower Feedback Power

At frequencies above 28GHz the interconnections of the multiple parallel cells of power transistors create parasitic capacitors and leading inductors that increase the internal output impedance, or the optimum reflection factor to be matched. Wherein at 2GHz Zout≈1- 2Ω (VSWR≈25-50:1) at 30GHz it is rather ≈5Ω (VSWR≈10:1). If a passive tuner can reach such VSWR at the transistor reference plane on wafer, then the overall setup simplifies radically. This is what makes Focus' new DELTA tuners so attractive. Hybrid (active+passive) tuning is often not necessary.

Hybrid tuning is not a panacea. Whereas it allows high VSWR at DUT reference plane, it still remains a rather complex test system with feedback power amplifiers and, often, a second, synchronized, signal source, plus the requirement for in-situ vector power wave measurement, possible through directional couplers inserted between the DUT and the tuner; this on the other hand reduces the tuning range and increases the need for even higher power amplifiers.

Passive pre-matching tuning in Hybrid systems reduces the requirement for high power from the feedback amplifiers, but only to some extent: passive tuners are not lossless. Tuner loss increases rapidly with reflection factor and so does the power requirement.

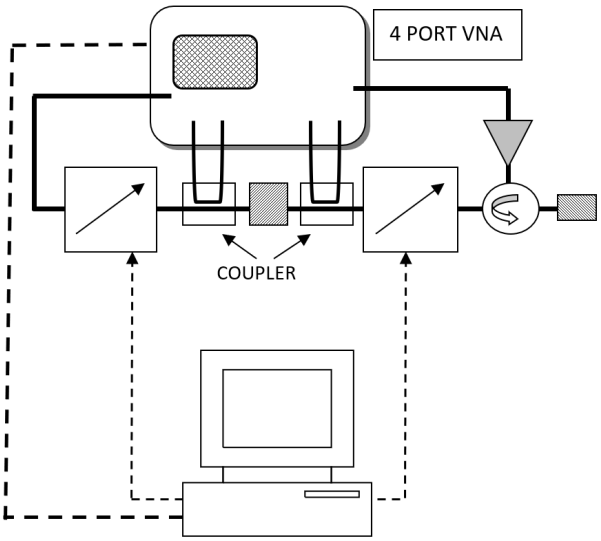

Figure 41

The critical quantity in tuner loss calculations is “mismatch loss”.

Mismatch loss is $S21^2/(1-S11^2)$.

For high S11 values, as needed to pre-match for enhancing the passive reflection factor with active injection in a hybrid configuration, it happens that any increase in insertion loss S21 (due to cables, adapters etc. between tuner and DUT) is multiplied by a factor $M=1/(1-S11^2)$. Typical values of the multiplication factor:
S11=0.9 (VSWR=19:1) >> M=5.3;
S11=0.96 (VSWR=50:1) >> M=13.

To increase the reflection factor at the probe tip (DUT) and minimize the power loss we must maximize S21 and minimize S11. Any mis-match loss must be compensated by additional injected power in a hybrid (active/passive) tuner. Or, if the additional insertion loss of the cable, or the bend-line, necessary without DELTA tuner, is 0.3dB at 30GHz, then the required feed-back power at S11=0.9 is 1.5dB (x1.4) resp. 4dB (x2.5) higher at S11=0.96. Whereas a DELTA tuner can operate with a 10W amplifier, a normal tuner requires at least 25W.

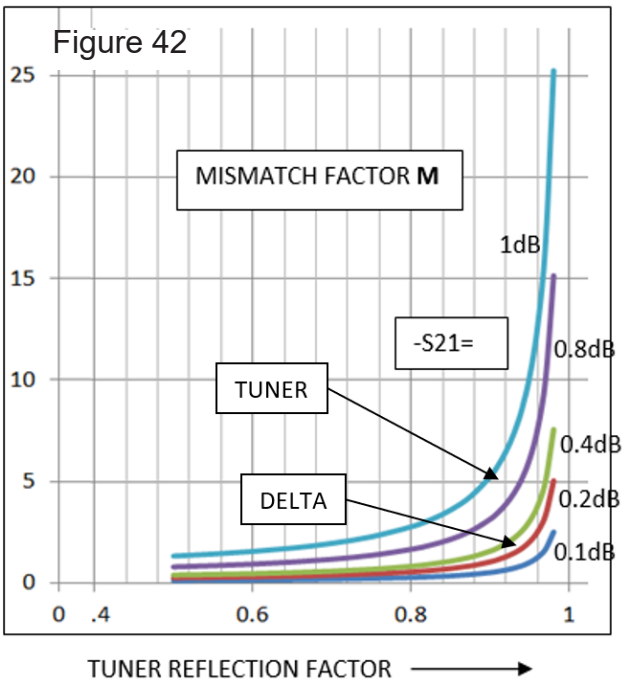

The DELTA tuners do just that. In most cases they even allow creating the required VSWR at the probe tips using passive tuning only. But even in hybrid configurations the higher S21 and the lower S11 required to pre-match reduce the injected power.

Example: |S21|=1dB;|S11|=0.95 of a normal tuner versus |S21|=0.2dB; |S11|=0.75 of a DELTA tuner saves ~9.8dB=9.6, a 5W versus a 48W amplifier.

Low Frequency Tuners (LFT)

Slide screw tuners are big and heavy. They are at least one half a wavelength long at the lowest frequency, plus some fringe components (carriages, walls, connectors). At 100 MHz this is close to 1.6 meters. Multi-probe (harmonic) tuners are twice or three times as long. In view of the required mechanical precision and available laboratory space, this becomes unbearable. Therefore a new type of tuner, the low frequency tuners, was developed [17, 18]. This type of tuner uses parallel blade rotary capacitors as adjustable components and sections of semi-rigid coaxial cable between them.

The frequency coverage of such tuners can be optimized to more than one octave. 3 or 4 capacitor stages are necessary. These tuners solve the size and associated mechanical precision, alignment effort and laboratory space requirement problems. Harmonic tuners on the same base are in development. Figure 43 shows a 4 capacitor 60-130MHz tuner in a 19” rack, calibrated points and tuned (synthesized) load pull impedances at 30 MHz.

LFT tuners are available from 5 to 200MHz.

Tuned Points of 30-60 MHz LFT

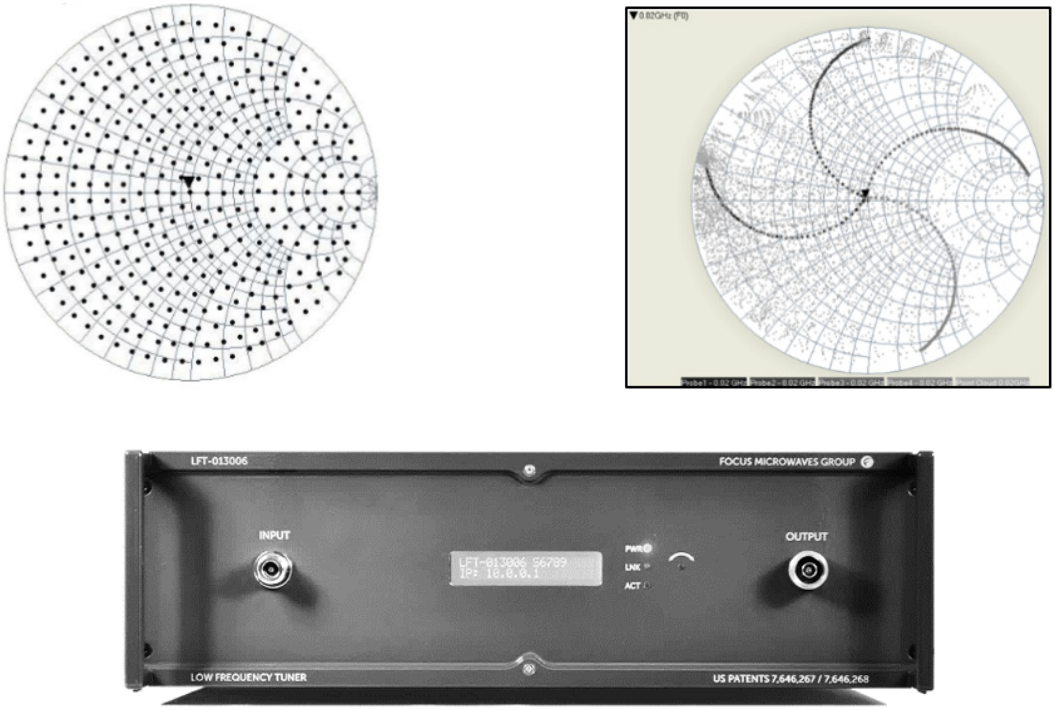

Figure 43

Fundamental Versus Harmonic Load Pull

Traditional passive tuners based on the slide-screw principle generate reflections over a large frequency bandwidth (figure 25). Whereas the reflection factor at the fundamental frequency Γ(fo) is calibrated and known, the reflection factors at the harmonic frequencies Γ(2fo), Γ(3fo) etc. may be "known" (if the tuner has been calibrated also at those frequencies), but they are not controlled. Since the DUT may create harmonic components of the injected frequency, such control of the load reflection factors is important, since they constitute important measurement conditions. This is not obvious, because the effect of "harmonic tuning" depends on the compression level of the DUT, and this, on the other hand, does not only depend on DC bias point and the level of the injected signal, but also on the load impedance at fo as well.

It shall not be forgotten that Gain contours, measured in class A using load pull tuners, are the same as gain circles, calculated using small signal S-parameters. It is, quasi, impossible to predict the importance of harmonic tuning. Until the dawn of passive harmonic tuners in 2000 [12], this phenomenon was silently overlooked [19].

Since then, the appearance of true passive harmonic tuners has settled the issue. Control of harmonic Impedances is, meanwhile, part of any professional load pull characterization, simply because the effect is not predictable; in short, "if you need load pull, you need harmonic load pull". If you operate in small signal under no compression conditions, then s-parameters are enough.

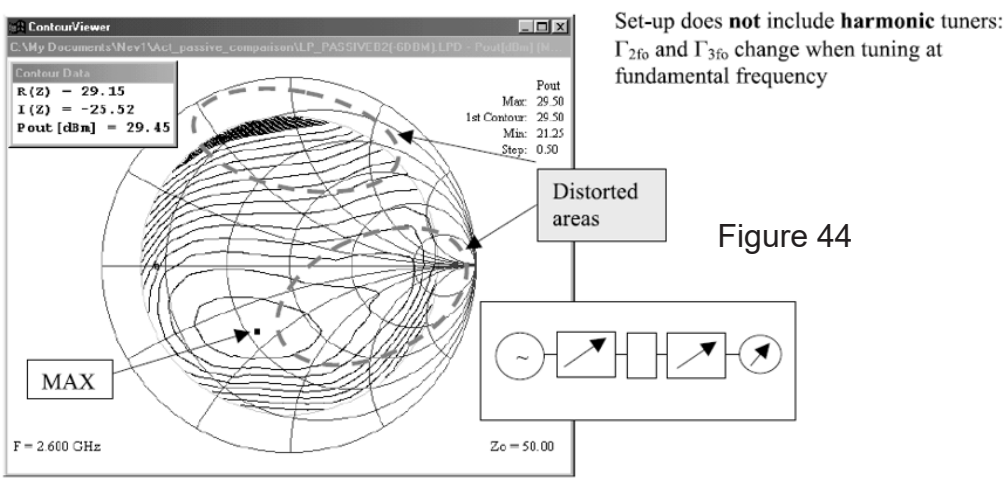

Figure 44

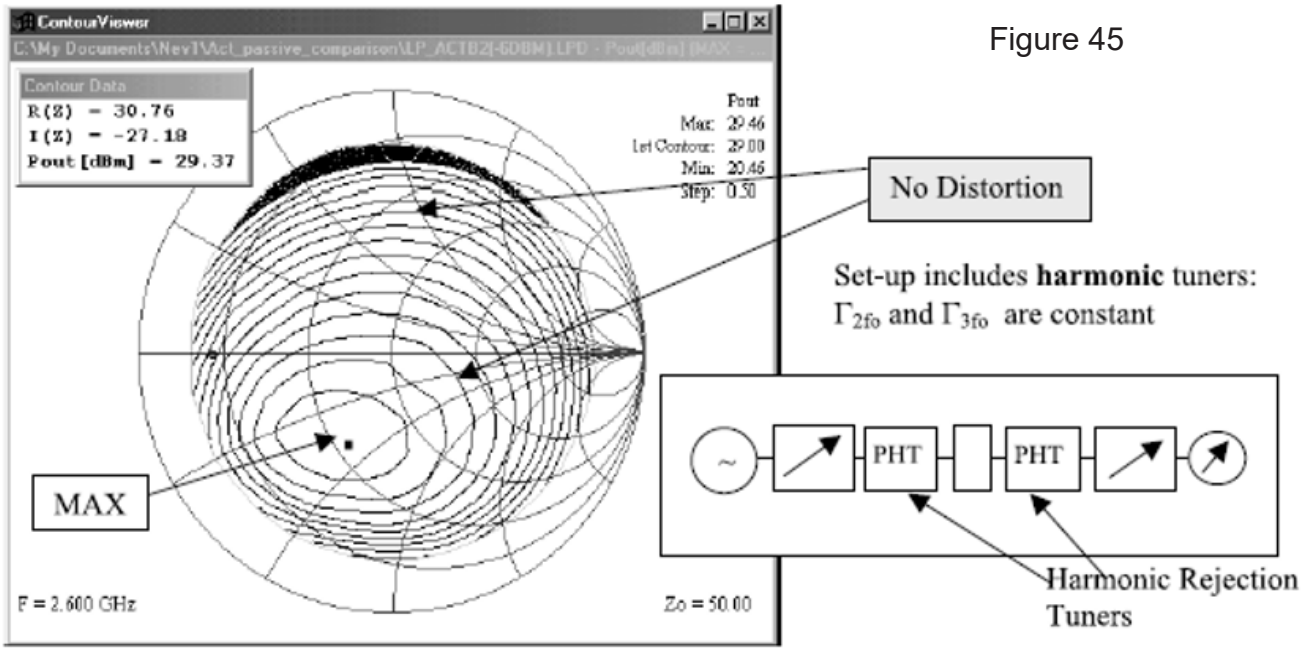

Figure 45

Figures 44-45 Load Pull contours at the same transistor, same frequency and same input power 44 no harmonic tuning, 45 fixed harmonic's load.

On Wafer Integration

Load pull testing moves inexorably from connectorized RF module testing to on-wafer chip testing. This is the only way to determine the exact, parasitic-free, capacity of the transistors. As already mentioned, this requires on-wafer high VSWR and high-speed testing methods, which is obtainable using active or hybrid tuning and through electronic or active tuning.

Because passive tuning is more stable, transparent and easy to troubleshoot, a number of users prefer this solution. Therefore, it is imperative to reduce insertion loss between the wafer probes and the tuning probe inside the tuners (not simply the tuner housing and test port). This is possible using the new DELTA tuner technology (figure 38).

The tuners are placed on custom made 3 axis positioners on the wafer probe platform. If the tuners are connected with the wafer probes using lossy flexible cable then the tuner body may stay fixed and only the wafer probe itself moves. If the tuners are rigidly connected with the wafer probes (for higher VSWR) then the whole tuner body must be controlled and stabilized. This led to the concept of extended slabline and tilting balance mechanism [20, 21].

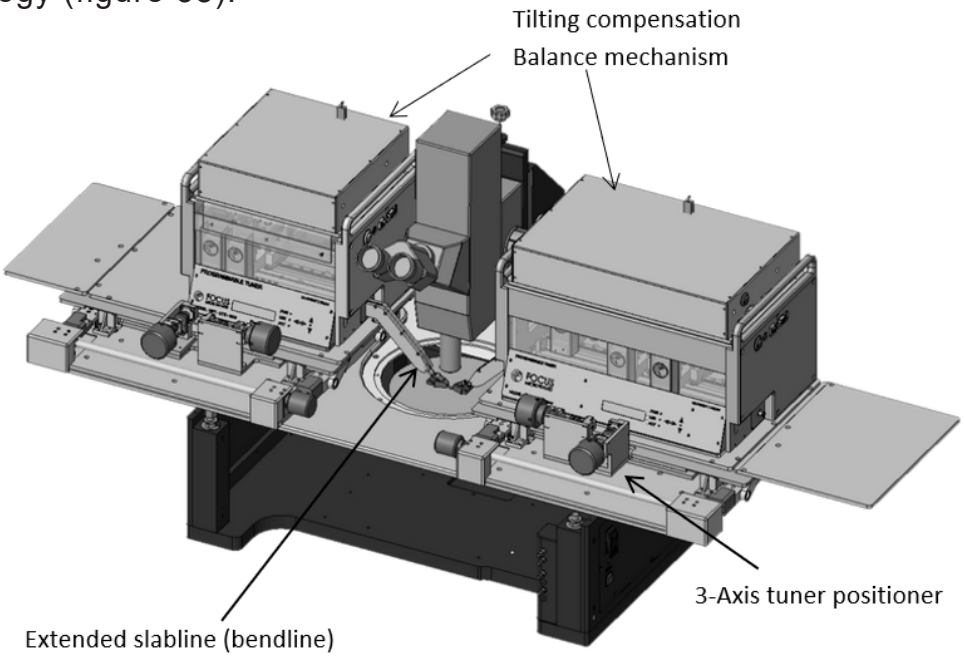

Figure 46 Wafer setup using tuners with low loss extended slablines

Figure 47 Wafer setup using DELTA technology *[patents pending]*.

Base-Band Load Pull

The impedance presented to the base-band frequency components of a modulated signal affects, though down and up-conversion, the overall device performance, especially ACPR, IMD and EVM. If a, through the down-up mixing behavior of the nonlinear DUT, generated current modulation component at base-band frequency, is presented with a high impedance, then it will naturally generate additional control voltage. This generated voltage manifests itself as modulation on the bias lines of the device. Furthermore, as measurements of modulated signals are often conducted with spectrum analyzers that give only scalar information, and such electrical effects usually occur as a device is driven close to compression, they can be misinterpreted as device related memory effects, when in fact, they are due to the impedance environment presented at the base-band [22 and pending]. Any modulation on the drain voltage supplied can result in the dynamic characteristic interacting with the device's boundary conditions, causing additional distortion. Introducing low frequency (MHz range) calibrated impedance tuners in the bias line path allows quantifying this phenomenon, figure 48.

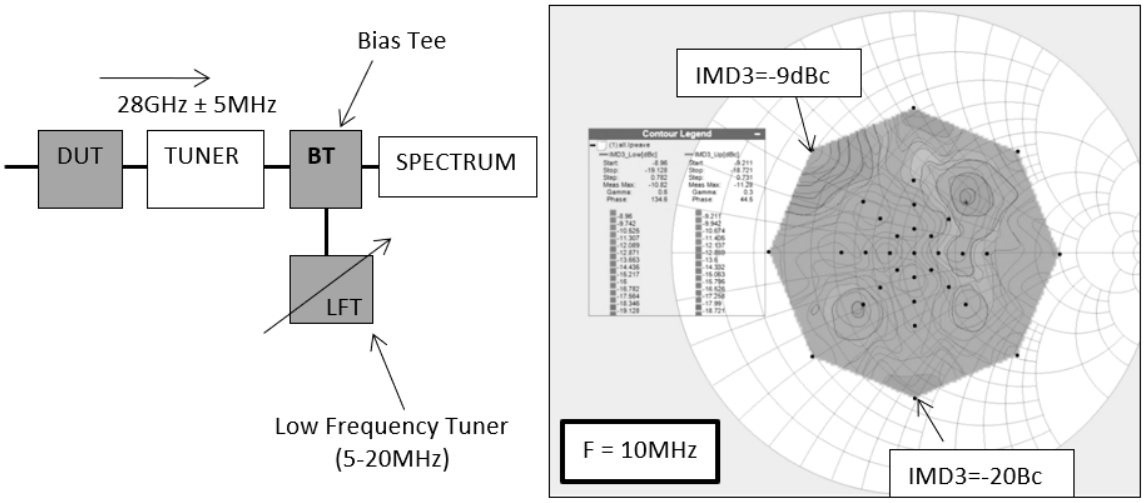

Figure 48 Test setup and 28GHz Intermod contours plotted over the 10MHz Smith chart

Advanced Considerations on Active Tuning

Introduction

The reflection factors created by the impedance tuners cover, typically, the largest part of the reflection factor plan (Smith chart); figure 49; appropriate tuning and interpolation algorithms between the calibration points allow creating almost every impedance within the tuning range (shadowed areas) with vector accuracy better than 40dB (1%); the insertion loss between DUT and tuner reduces the effective tuning range at the DUT ports (small shadowed area, (D) compared with the "tuning range at tuner test port" (C); therefore the actual tuning capacity of such a "passive" tuner system is shown as "tuning range at DUT port").

Many power transistors (DUT) need to be matched at impedances shown as dots (A) or (B). In case (A) a minimization of the test fixture and interconnection loss might allow the tuner to reach this point. But in many other cases, like in the case (B) this is simply impossible using a passive tuner system. In this case an "active" solution is necessary. In this case a second signal, coherent (synchronized) with the signal delivered to the DUT at its input port, is injected into the output port of the DUT; the phase and amplitude of the second signal is adjusted, such as to generate a virtual load, which can create a reflection factor larger than the reflection factor created by the passive tuner alone.

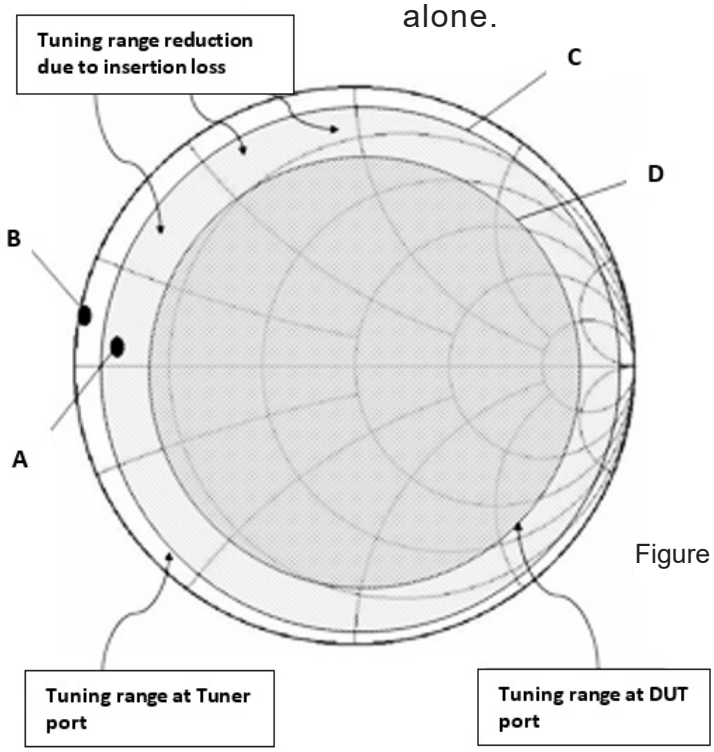

Figure 49

Traditionally, load-pull or 'emulation' of load impedance has been achieved using passive techniques, as discussed earlier; these systems having become vastly more capable, with faster tuning times, increased frequency coverage and harmonic capabilities, still dominate the market. More recently, active systems have begun to penetrate the market along with a clear increase in customer demand; so, what factors drive this shift towards active tuning?

In the past the key advantage of active systems over passive systems was considered to be the ability to overcome the loss between the device under test and the tuner, which meant that any impedance could be emulated. In reality however, in the vast majority of cases the precision engineered tuners can reach the desired VSWR; in addition, methods such as impedance transformers, using for example Klopfenstein lines (figure 18) to change the system impedance can successfully shift the emulated VSWR circles to allow characterization of even the lowest impedance devices. There are of course still some cases where loss can be an issue, for example at higher frequencies (particularly at harmonics) or where couplers are placed between the test device and the tuner (vector load pull for distorted waveforms) and here active offers an advantage, but in reality, the surge in interest is triggered by two key benefits namely (a) speed and (b) the ability to control impedance over a modulated bandwidth, that are, both, alien to passive electro-mechanical tuner systems.

In terms of speed, advances in test equipment and general computing power along with the development of modular instrumentation platforms such as PXI, allowing for enhanced data transfer speeds, mean that by far the overriding factor in test speed over a passive load-pull setup is the time taken for the mechanical movement of the probe within the tuner, thus moving to an active approach, where the injected signal can be manipulated at a very fast rate, can have a significant impact on the overall test time. This becomes critical at a time with increasing desire for full wafer test.

In terms of bandwidth, the advancement of communications standards has, and continues to be driven by a range of bandwidth-hungry applications, not least the once humble mobile phone, which has been transformed into a personal communications device, providing multi-media wireless solutions including voice, video, graphics, audio and broad-band internet access. This advancement has led directly to the creation of several

complex wider-band, multi-carrier modulation schemes employing, amongst other things, a combination of phase and amplitude modulation, that strive to make the most efficient use of the spectrum in order to meet demand. As we move closer to the era of 5G and even wider-band signals, the validity of designing for a wide-band end application using only CW or pulsed drive signals is questioned, and users need to move the test scenarios much closer to the end application, or the tuner should be able to emulate the future matching network's response for the entire bandwidth of the modulated signal.

Closed Loop (Active Load)

The first closed-loop active load-pull architecture was presented in 1982 [23]. In this closed-loop architecture, depicted in figure 50, a direct RF feedback loop is employed.

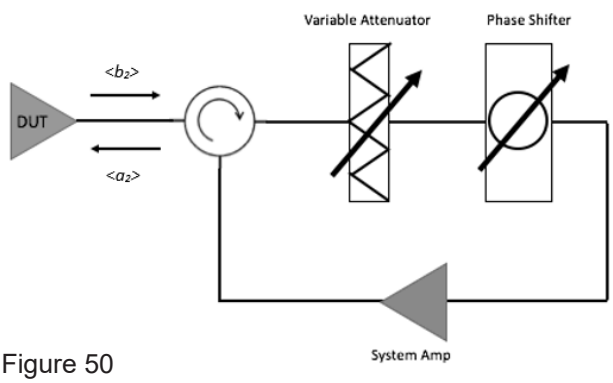

Figure 50

The output of the device is passed through a circulator and is then attenuated and phase-shifted to emulate the desired impedance, before being amplified to overcome the losses in the system. The load-pull (injected) signal is a directly related, modified version of the DUT output signal. This ensures the emulated load impedance to be independent of drive level and any changes in phase of the device output. The use of such systems in industrial environments has however uncovered a major problem with the architecture in that it is prone to instability, due to the closed RF loop employed. Such oscillations are particularly dangerous as they not only destroy the device but could also destroy any measurement equipment in the test set due to maximum input powers of the instruments being exceeded. An attempt to solve the oscillation problem involved a tunable YIG filter, incorporated into the active closed loop, to limit the possibility of oscillation, but the phase change at the resonance frequency is large and creates strong skewing for two-tone or modulated signals.

In terms of modulated capabilities, closed loop architectures have a severe limitation, as delay around the loop over a modulated bandwidth cannot be compensated, leading to reflection factor phase spreading or impedance “skewing” over a modulated bandwidth (figure 51), following the formula $\Delta\Phi(^o)=0.024*L_{el}(cm)*\Delta f(MHz)$, whereby L_{el} is the electrical length of the loop; in fact the impedance spread is even greater that that created by passive tuners, especially DELTA tuners, with measurements on a commercial setup suggesting that this spread can be as high as 30º/MHz in the impedance space, compared to around 3º/MHz for a typical passive setup, causing misleading values for important figures of merit such as Output power, Efficiency and adjacent channel power ratio (ACPR). Figure 45 depicts “skewing” for the various modulation schemes.

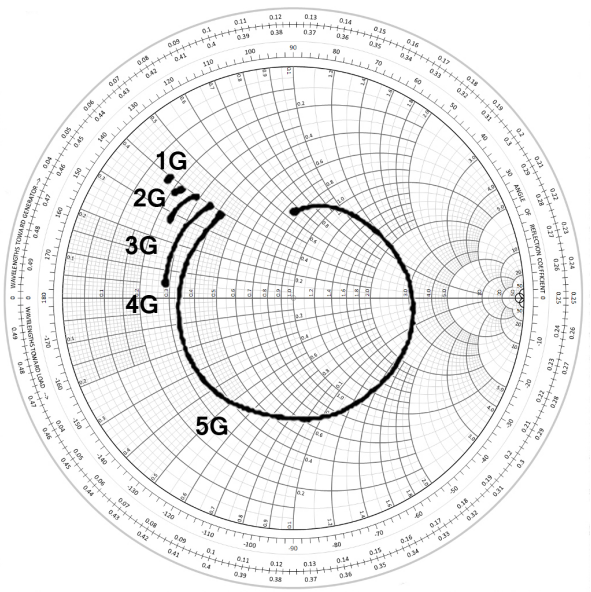

Figure 51

Open Loop - Split Signal

Due to the potential oscillation problems with the closed-loop architecture discussed above, active load-pull systems in open-loop configuration have been developed. Open-loop architectures do not rely on feedback of the device output signal, instead they work by generating a new signal to ‘inject’ into the output of the test device to emulate load reflection. The concept was first demonstrated by Takayama [1] (figure 52)

it uses a split signal technique whereby the signal is split with one half used to drive the test device, the other half is modified in terms of magnitude and phase and injected into the output of the test device.

By its nature, this method avoids the stability problems associated with closed-loop feedback architectures, as there is no longer a direct RF feedback path. There is however no longer any relationship between the device output and input-derived load-pull signals. Any change in the reflected power wave changes the output state of the device, thus changing the achieved load impedance. This leads to an iterative process where a number of magnitude and phase adjustments of the injected signal are required to maintain the target reflection coefficient.

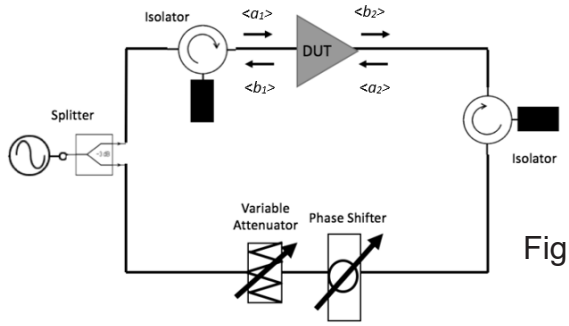

Figure 52

The open-loop architecture was improved using an I-Q Vector modulator, thus providing a solution that was both easier to automate. A further extension came with the introduction of microwave signal generators with phase lock capabilities (figure 53).

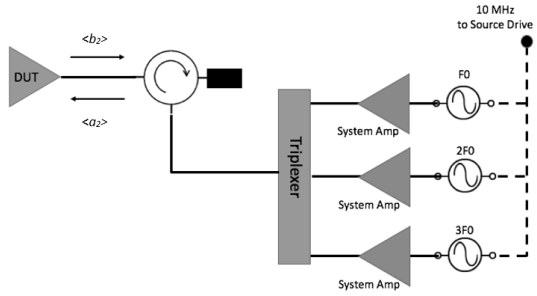

Figure 53

The ability to phase-lock signal generators using a 10 MHz reference signal allowed multiple signal generators to be locked together which meant relative magnitude and phase adjustments could be made. This allowed the injected signal <a2> to be generated independently, using signal generator(s) that are phase locked to the input signal generator. The output of the device is again terminated into a passive 50Ω load using a circulator. This extension allowed the use of more than one signal generator to control the impedance of harmonics, as well as the fundamental frequency component, and allowed for full automation of the active load pull approach as the desired impedance could be controlled with a software algorithm defined to deal with the iteration required to set the load.

Such systems have become more prevalent as VNA architectures have developed to include multiple internal signal generators. The introduction of internal signal generators based on direct digital synthesis (DDS) allows sources with absolute phase coherence making them ideal for application in open loop active load-pull systems; for example, the ZVA-67 from Rhode and Schwartz has 4 DDS based internal signal generators providing all necessary receivers and signal generators in a single instrument, making it an ideal base instrument for harmonic active load-pull [24]. Open-loop solutions do however suffer from the fact that measurements are rather time consuming as the injected signal has become decoupled from the device output.

The problem is further compounded when drive conditions are varied; with no link between the device output and injected signal, any change in the input signal leads to a further round of iteration to re-establish the required load. Clearly as we move to modulated signals, we can no longer use the established approach of using a new signal generator for injection at each generated signal frequency; while the method was practical for CW load- pull with harmonics, clearly this will not scale to complex modulations with thousands of generated frequency components both in and out of band. Anteverta [25] offer a modulated system based around the open loop architecture. Here PXI based AWG's (arbitrary wave form generators) and swept receivers are used to allow the capture and control of complex modulated waveforms. They also introduce the concept of time segmented RF injection waves to dramatically increase the speed of CW and pulsed load-pull measurements, however, for complex modulated signal, due to the coupled effect of in-band and harmonic components of the signal, the control for iterative setting of the load becomes very complex with an average of 100 iterations required to set a single load or source impedance.

Quasi Closed Loop LoadPull

The benefits of the closed loop architecture without the RF stability issues offers Mesuro's RAPID system [26]; it comprises quasi-closed loop architecture. In this system (figure 54), the device output is fed into a feedback loop but this time it is down converted, then processed digitally before being up converted to form the desired injected signal. This architecture retains the real time load tracking of the closed loop architecture but the risk of un- controlled oscillations is removed as the RF loop is now discontinued.

The RAPID system is based around a PXI architecture, and integrates measurement of RF parameters such as power added efficiency, EVM and ACPR; the PXI based architecture, combined with the digital loop leads to very fast load-pull extraction, including impedance synthesis iterations and output power measurement. The architecture also lends itself to load-pull of wide-band modulated signals and emulation of matching networks. The digital processing also allows for delay compensation of the loop allowing for a true wide-band load to be presented across a modulated bandwidth.

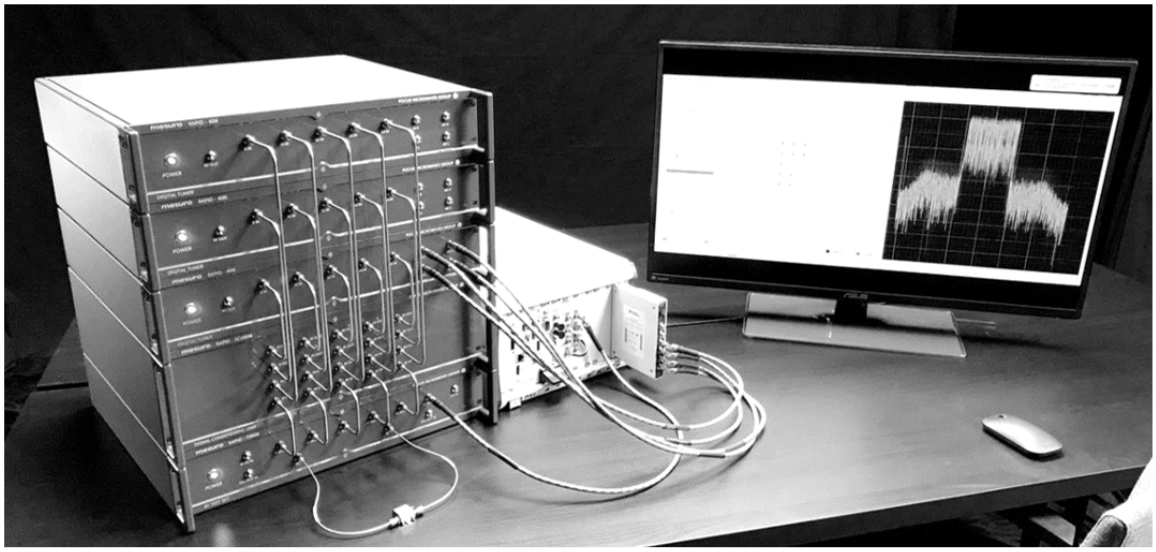

Figure 54 Harmonic RAPID quasi closed loop active tuner.

The open loop architecture and FPGA algorithms allow for real-time tuning. The speed of a CW load pull is approximately: 5ms per load synthesized at 1KHz IF BW (200 points/ second). This includes impedance synthesis and output power measurement (figure 55).

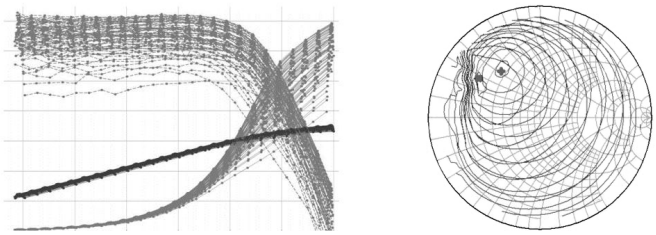

Figure 55

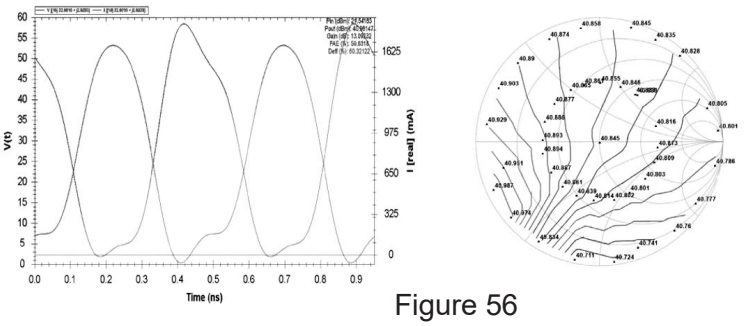

Figure 56

Combined with a calibrated phase-reference allows accurate time domain waveforms (figure 56) for ultra-fast behavioral model extraction.

Data Transfer Into CAD and Nonlinear Models

There are two main methods of importing load-pull data into the simulation environment, namely direct data import or the creation of a model of the test device. For simple data analysis CAD vendors provide the ability to load and display data from load-pull systems, these scripts have evolved along with the load-pull setups to deal with complex swept load-pull data sets including nested harmonic load and source-pull with power.

This offers the user the possibility to interpolate data, view results and even design matching networks; this approach is limited, however, by a number of factors. The ability of the simulator to correctly predict performance is highly dependent upon the density of the original dataset, also this approach is limited to linear simulator types, so it cannot be used for example with non-linear simulators such as harmonic balance; this is a problem particularly where more than one active device is used as would be the case in a multistage or parallel PA design.

Traditionally, modelling has involved the extraction of a physical description of a device usually achieved by fitting measured pulsed DC, s-parameter and load-pull data to a physical model of the resistors, capacitors, inductors and current sources that make up the semiconductor device.

This is clearly a time-consuming process and requires a good understanding of the underlying device physics. More recently non-linear behavioral models aim in providing a more seamless process of modelling a test device for use in the simulator.

One example of such a non-linear behavioral model is X-Parameters™ from Keysight Technologies™; this Poly harmonic distortion (PHD) formulation first introduced by Verspecht [28], is described as a mathematical superset of s-parameters and has the same use case as s-parameters in the simulator, but in the non-linear domain. It allows for models that predict the magnitude and phase response of a test device at harmonic frequencies, these models can also be cascaded to allow for example system or multi-stage/parallel simulation.

When combined with a load-pull setup, a number of models can be extracted to produce a model using load look-up. A simplified measurement setup for model extraction is shown in figure 57; here small perturbation ("tingle") tones at the input and output close to fundamental and harmonic frequencies are used to map the input and output frequencies to one another.

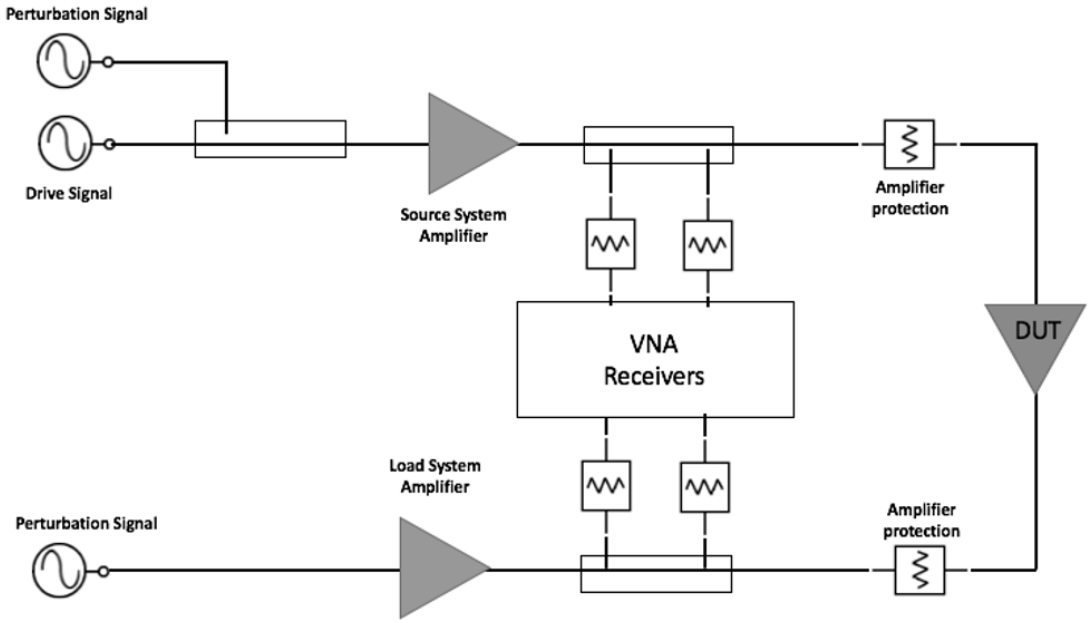

Figure 57

Another non-linear behavioral model proposed by Woodington et. al. [27] and now commonly known as the Cardiff Model+ (CM+), extends this formulation to allow for higher order polynomial fit of the data, this has the benefit of being able to model the performance of the device over a range of fundamental and harmonic impedances in a single model, the formulation shown in equation {1}, with equivalent Fourier series description in equation {2}.

The model does not assume the superposition principle, which means that the full mixing relationship of the harmonics can be uncovered; this is particularly important for designers looking to model devices in modes of operation involving strong harmonic interaction, such as Class F.

$$B_{n,h} = P_1^h f(V_{1,0}, A_{1,1}, V_{2,0}, \frac{A_{2,1}}{P_1})$$

h – harmonic index
n – port index
$P_1 - < A_{11}, Q_1 < A_{21}$ {1}

$$B_{n,h} = P_1^h \sum_{-(\omega-1)/2}^{+(\omega+1)/2} K_{n,h,m} \left(\frac{Q_1}{P_1} \right)^m$$

m – phase index {2}

The extraction process is also simplified: Rather than using small perturbation signals the Cardiff Model+ can be extracted directly from standard vector load-pull measurements providing a very simple and quick way of producing a non-linear model of a test device.

While easy to extract and less time consuming to create, compared to a physical device model, behavioral models should be used with care, they are formulations to describe the measured behavior of a test device, so while interpolation is accurate, extrapolation should only be used with care to avoid erroneous results.

References

1. "Harmonic Effects in Load Pull using Wideband Tuners", Application Note 56, Focus Microwaves Inc., August 2003, https://focus-microwaves.com/application-notes/.
2. J.M. Cusack, S.M. Perlow and B.S. Perlman, "Automatic load contour mapping for microwave power transistors", IEEE Trans. Microwave Theory Tech., vol. MTT-22, pp.1146-1152, Dec. 1974.
3. "A New Load-pull Characterization Method for Microwave Power Transistors," Y. Takayama, [online], 1976 IEEE Microwave Theory & Techniques Society (MTT-S) International Microwave Symposium, pp. 218-220. [Retrieved on 2017-04-06]. Retrieved from Internet <URL: http://ieeexplore.ieee.org/document/1123701/>.
4. "809B/8146 Universal Probe Carriages", 1962 Short Form Catalog, Hewlett Packard Company, pp 11.
5. Adamian et al., US Patent 5,034,708, "Programmable Broadband Electronic Tuner".
6. Woodin et al., US Patent 5,276,411, "High power solid state programmable load".
7. "Kilo-Watt Range Tuners", Product Note 90, Focus Microwaves Inc., July 2017, https://focus-microwaves.com/articles-2/
8. "Buckling", Wikipedia, https://en.wikipedia.org/wiki/Buckling#Buckling_under_tensile_dead_loading
9. Tsironis, C., US Patent 8,975,988, "An Impedance Tuner Using Dielectrically Filled Airline".
10. Tsironis, C., US Patent pending, "High Power Tuners and Method".
11. Tsironis, C., US Patent 6,297,649, "Harmonic rejection load tuner".
12. "Programmable Harmonic Tuner, PHT", Product Note 44, Focus Microwaves Inc., November 1997, https://focus-microwaves.com/articles-2/

13. "Harmonic Tuning Isolation in Load Pull Setups using PHT", Application Note 33, Focus Microwaves Inc., May 1999, https://focus-microwaves.com/application-notes/

14. "A Load Pull System with Harmonic Tuning", ATN Microwave Inc. Microwave Journal, Product Feature, pp. 128-132, March 1996.

15. "MPT, a Universal Multi-Purpose Tuner", Product Note 79, Focus Microwaves Inc., October 2004, https://focus-microwaves.com/articles-2/

16. Tsironis, C., US Patent 7,135,941, "Triple Probe Automatic Slide Screw Load Pull Tuner and Method".

17. Tsironis, C., US Patent 8,212,629, "Wideband low frequency impedance tuner".

18. Tsironis, C., US Patent 7,646,267, "Low Frequency Electro-Mechanical Impedance Tuner".

19. "Harmonic Effects in Load Pull using Wideband Tuners", Application Note 56, Focus Microwaves Inc., August 2003, https://focus-microwaves.com/application-notes/

20. Tsironis, C., US Patent 7,102,457, "Mechanically balanced microwave load pull tuner".

21. Tsironis, C., US Patent 9,431,999, "Intelligent mechanical balancing apparatus for slide screw tuners".

22. Tsironis, C., US Patent 9,310,410, "Load and source pull test system for RF and baseband frequencies".

23. Active load technique for load-pull characterisation at microwave frequencies", Bava, G.P.; Pisani, U.; Pozzolo, V, Electronics Letters, Volume 18, Issue 4, February 18, 1982, pp.178 – 180.

24. "R&S®ZVA Vector Network Analyzers", Datasheet, Rohde & Schwarz, https://www.rohde-schwarz.com/ca/product/zva-productstartpage_63493-9660.html.

25. Marchetti, et al, US Patent 8,456,175, "Open loop load pull arrangement with determination of injections signals".

26. Tasker et al., US Patent 6,639,393, “Methods and apparatus for time-domain measurement with a high frequency circuit analyzer”.

27. “A novel measurement based method enabling rapid extraction of a RF Waveform Look-Up table based behavioural model “, S. Woodington ; T. Williams ; H. Qi ; D. Williams ; L. Pattison ; A. Patterson ; J. Lees ; J. Benedikt; P. J. Tasker

28. 2008 IEEE MTT-S International Microwave Symposium Digest, 2008, pp 1453-1456.

29. Verspecht et al., US patent 7,282,926, “Method and an apparatus for characterizing a high-frequency device-under-test in a large signal impedance tuning environment”.